EPIC® SENSORS

Immersible Temperature Sensor
Type: T-A-Ø / T-A-Ø-U or W-A-Ø / W-A-Ø-U

EN, Installation Instructions and User Manual
Manual 8

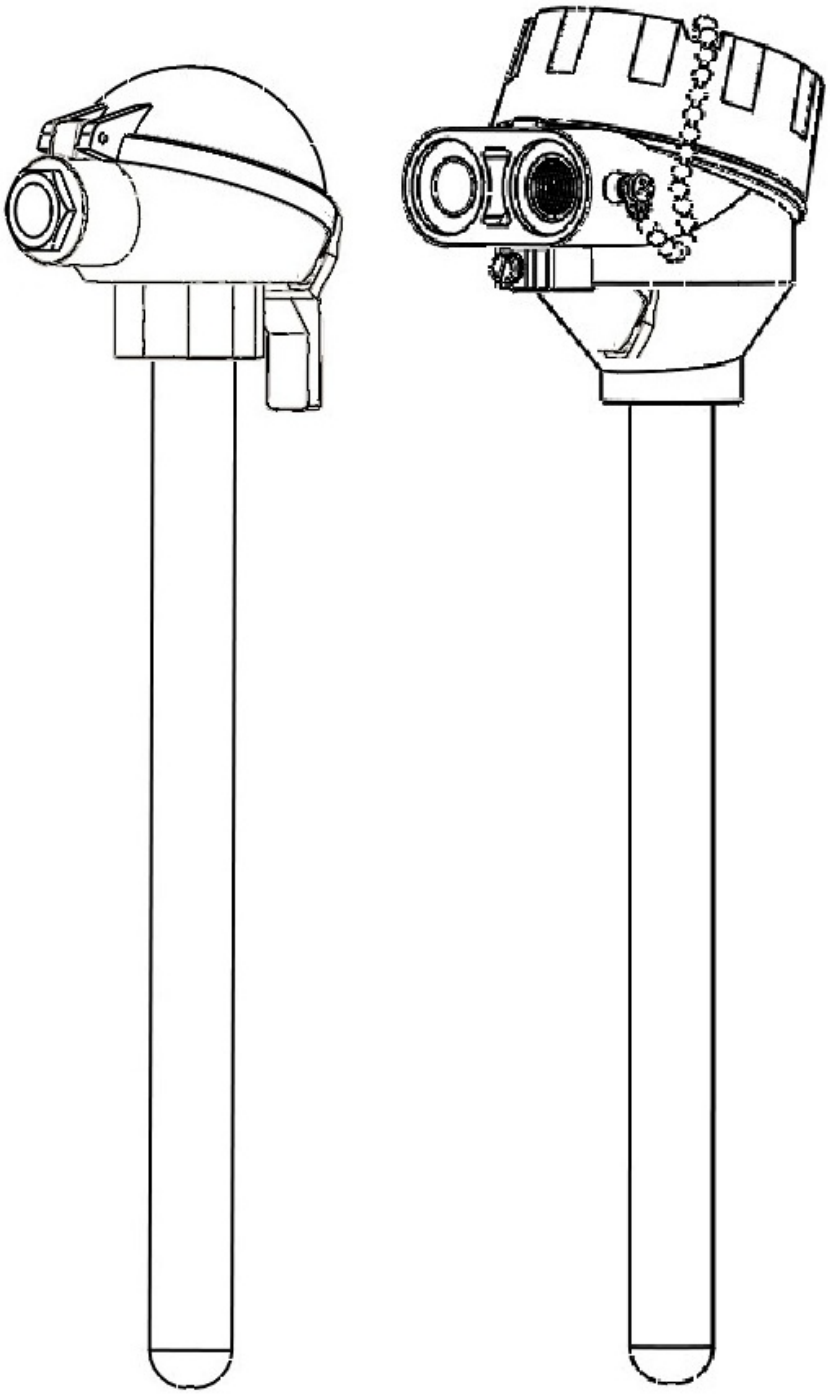

Lapp Automation Ltd.
Äyritie 18
FI-01510 Vantaa, Finland

lapp.fi

Technical sales:
Tel: +358 (0)20 764 6410

Open orders:
Phone: +358 (0)20 764 6420

Domicile
Vantaa

Business ID: 1107293-1
VAT: FI11072931

Lapp Automation is part of the LAPP Group
A Lapp Group Company

Lapp Insulator is not part of the LAPP Group
Lapp Insulator is not affiliated
with the LAPP Group

Table of contents

General information 4
Product description and intended use 4
Temperatures, measuring point 5
Temperatures, connection head 5
Temperatures, Ex versions 5
Temperatures measuring element 6
Code key 7
Example 1 8
Example 2 8
Technical information 10
Materials 10
Dimensional drawings 11
Solid tip 12
Temperature tolerance 13
Installation instructions 14
Installation with flange 14
Flange Ø15, drawing 1018378 15
Flange Ø22, drawing 1018382 16
Flange Ø32, drawing 1018383 17
Installation with weldable flange 18
Weldable flange Ø15, drawing 911984 19
Weldable flange Ø22, drawing 911985 20
Weldable flange Ø32, drawing 911986 21
Using a welding sleeve 22
Installation with compression fitting 23
Connection heads 24
Technical information 25
Connection head HST 26
Connection head B 28
Connetion head N 30
Connection head D/H 32
Connection head D/H/D 36
Connection head D/W/H 41
Connection head D/W/H/D 46
Connection head EXD 50
Lid gasket 55
Measuring element 56

Code key 58
Length 58
Inspection 58
Calibration 60
Measurement error and tolerance 60
Insulation resistance 60
Type plate 61
Replacing the measuring element 61
Adding transmitter to the sensor 62
Connecting cable to the sensor 63
RTD; resistance temperature sensor connections 66
RTD; measurement current 66
Response time 67
TC; thermocouple structure 68
TC; thermocouple color codes (IEC 584) 70
TC; thermocouple color codes (DIN 43714) 71
TC; thermocouple color codes (ANSI MC96.1) 72
TC; Thermocouple cable color codes 73
Type plate 74
Serial number 74
Ex d approved sensor 74
Special conditions for safe use of Ex d approved sensor 74
Ex d approval ja Ex marking 75
Type plate of Ex d approved sensor 75
Ex i approved sensor 77
Special conditions for safe use of Ex i approved sensor 77
Ex i approval and Ex marking 77
Type plate of Ex i approved sensor 78
Transportation, packaging and storage 79
Maintenance and cleaning 79
Recycling and returns 79
EU declaration of conformity 79
Manufacturer’s addresses 80
Document version 80
Appendix A – Technical information and special conditions of use - Ex i certified EPIC® SENSORS temperature sensors

General information

All components are carefully monitored for quality and compliance with standards. Our quality assurance is standardized according to ISO-9001, ISO-14001 and ISO-45001 certificates.

This manual contains important information for using the product. Particular attention should be paid to operating temperatures and environmental requirements.

Product description and intended use

Sensor types T-A-Ø, T-A-Ø-U (TC; thermocouple) and W-A-Ø, W-A-Ø-U (RTD; resistance thermometer) are threaded immersible temperature sensors. The design of the sensor complies with the standard DIN 43772 form 1.

The sensors are specially intended for various industrial temperature measurement applications where the medium under measurement can be abrasive and grinding. The sensor has, tight and sealed, protective thermowell that is most commonly immersed to the substance of the process. The thermowell tip can be made as a solid tip. This increased the life time and there is more protective material to wear off during the operations. Most commonly the material of the thermowell is low carbon steel AISI 316L (EN1.4404) or temperature resistant steel AISI 446-1 (EN1.4749). The material and the length of the thermowell can be manufactured according to the customer specification.

The sensor's internal measuring element is mineral insulated and can be replaced if it broken. The measuring element can be replaced by simply opening the connection head. The entire sensor housing does not need to be removed from the installation site. The measuring elements can be of either type: TC; thermocouple or RTD; resistance temperature sensor.

A temperature transmitter can be included in the sensor, which will convert the voltage signal of the temperature being measured into a more noise resistant electrical current mA-signal.

The sensor is also available in ATEX and IECEx approved versions with Ex d and/or Ex i protection classes designed for explosive atmospheres.

EPIC® SENSORS temperature sensors are measuring devices for professional use. The user who performs the installation of the unit must be professionally qualified to perform installations in the environment of the intallation site. The installer must have an understanding of the general and local requirements for mechanical and electrical installation, as well as the occupational safety instructions to be followed at the installation site. The work must be carried out using protective equipment appropriate to the task and the possession of a permit to work at the site must be ensured.

Temperatures, measuring point

The measuring temperature range of the sensor tip is typically:

- RTD; resistance temperature sensor -40…+450 °C (temporarily +550 °C)
- TC; thermocouple -40…+450 °C (temporarily +550 °C)

Note: This sensor type does not have a neck pipe for cooling. The process connection thread is close to the connection head. Make sure that the process temperature is not too high for the connection head and/or its contents.

Temperatures, connection head

The permissible ambient temperature range for the connection head and its internal components is:

- Without transmitter -40…+135 °C
- With transmitter according to the temperature tolerance of the transmitter, see the transmitter datasheet

Temperatures, Ex versions

For Ex versions only, special conditions are given in the ATEX and IECEx certificates. For more information, see the table of contents:

Ex d approved sensor, subtitle:

- *Special conditions for safe use of Ex d approved sensor*
  (the sensor product name must contain the code -EXD-)

Ex i approved sensor, subtitle:

- *Special conditions for safe use of Ex i approved sensor*
  (the sensor product name must contain the code -EXI)

Temperatures measuring element

This section presents general temperature ranges for different measuring elements. The temperature ranges are indicative and only for the temperature measuring element itself. Temperature range presented does not take into account the other parts of the sensor structure around the measuring element, or their temperature tolerance, or their maximum limits:

- *Pt100* resistor -200…+850 °C, (depending on the resistor model)
- *Thermocouple type K* -200…+1260 °C
  (commonly used element, accurate and reliable)
- *Thermocouple type L* -200…+600 °C
- *Thermocouple type J* +95…+760 °C
  (note: oxidizes easilly at high temperatures > +550 °C)
- *Thermocouple type S* +980…+1600°C, (temporarily +1700 °C)
- *Thermocouple type R* +870…+1480 °C
- *Thermocouple type B* +870…+1700 °C
  (recommended range approx. +1370…+1700 °C)
- *Thermocouple type N* +650…+1260 °C
  (better oxidation resistance than K-type, not a direct replacement)
- *Thermocouple type U* -200…+1260 °C
- *Thermocouple type T* -200…+370 °C
  (stable at low temperatures, e. g. cryo applications)
- *Thermocouple type E* +95…+870 °C
  (high response /°C)

Code key

The code key can be used to read the product structure according to the product name. The image below shows the code key for the sensor type:

Example code: T — A — 22 — D/H — U / 1000 / 1.4749 — K — 1 — TR — X

W	= Pt100 resistance thermometer
2xW	= 2 x Pt100 resistance thermometer
T	= thermocouple
2xT	= 2 x thermocouple
A	= immersible sensor type (constant in code)
10, 22	= outer diameter of sensor element (ØOD) [mm] (other diameters available on request)
B	= connection head B
D/H	= connection head with snap lock
D/H/D	= connection head with snap lock and double barrel (2x cable gland)
D/W/H	= high cover connection head with snap lock
D/W/H/D	= high cover connection head with snap lock and double barrel (2x cable gland)
EXD	= ATEX-compatible connection head
HST	= acid proof connection head
N	= connection head N
empty	= without solid tip
U	= with solid tip (tip length typically 200 mm)
1000	= length, L [mm]
1.4404, 1.4749	= thermowell or tip material, (other materials on request)
4,3,2	= Pt100 wire count
K,N,J	= thermocouple type
A,B	= Pt100 accuracy class, (class A as standard delivery)
1,2,3	= thermocouple accuracy class, (class 1 as standard delivery)
TR	= wires for transmitter connection
CB	= with ceramic terminal block
EXI	= Ex i certified sensor
X	= additional details on the text line

Example 1

Product name according to the codekey: T-A-22-D/H-U/1000/1.4749-K-1-TR

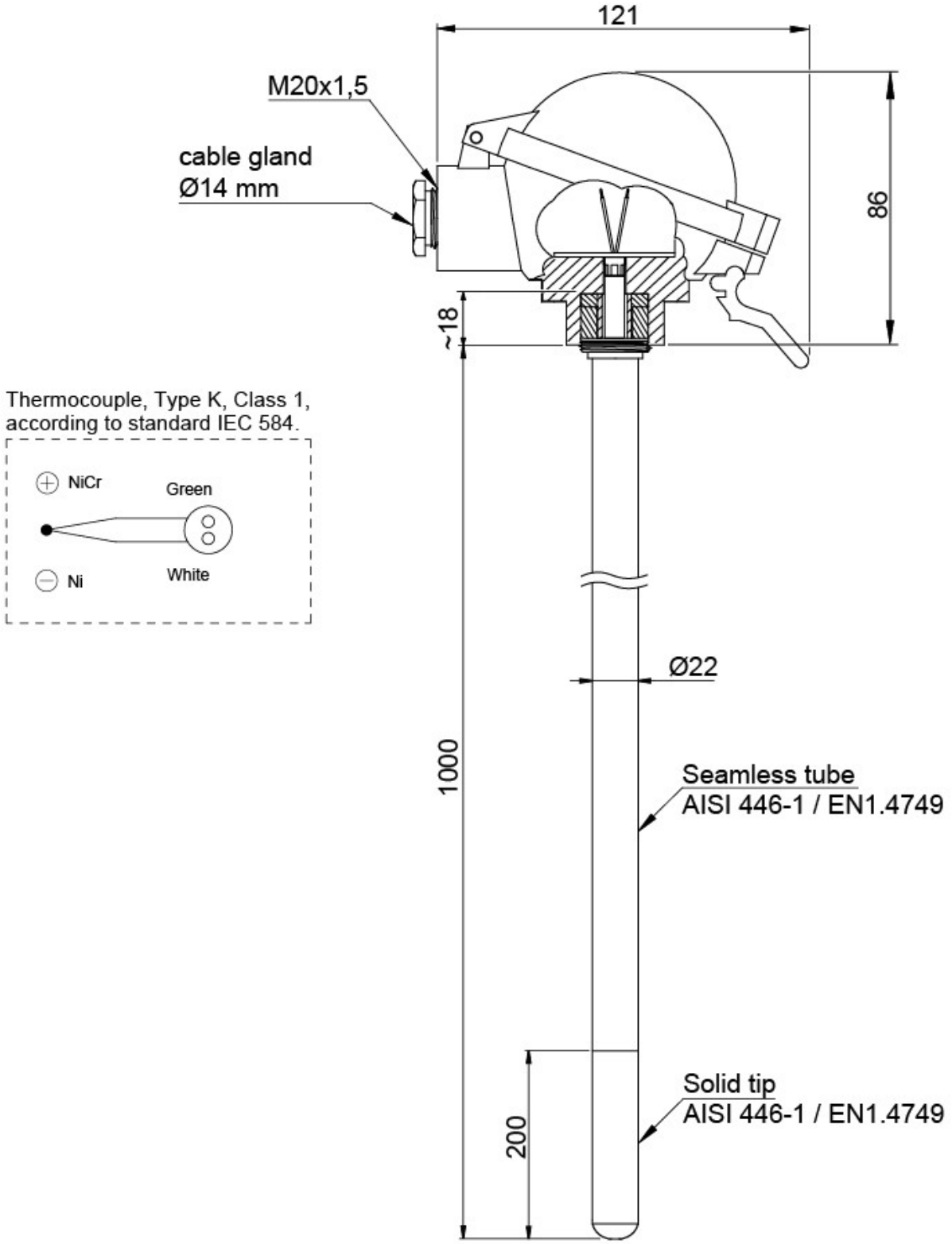

Example 2

Product name according to the codekey: W-A-15-EXD-710-4-A-CB

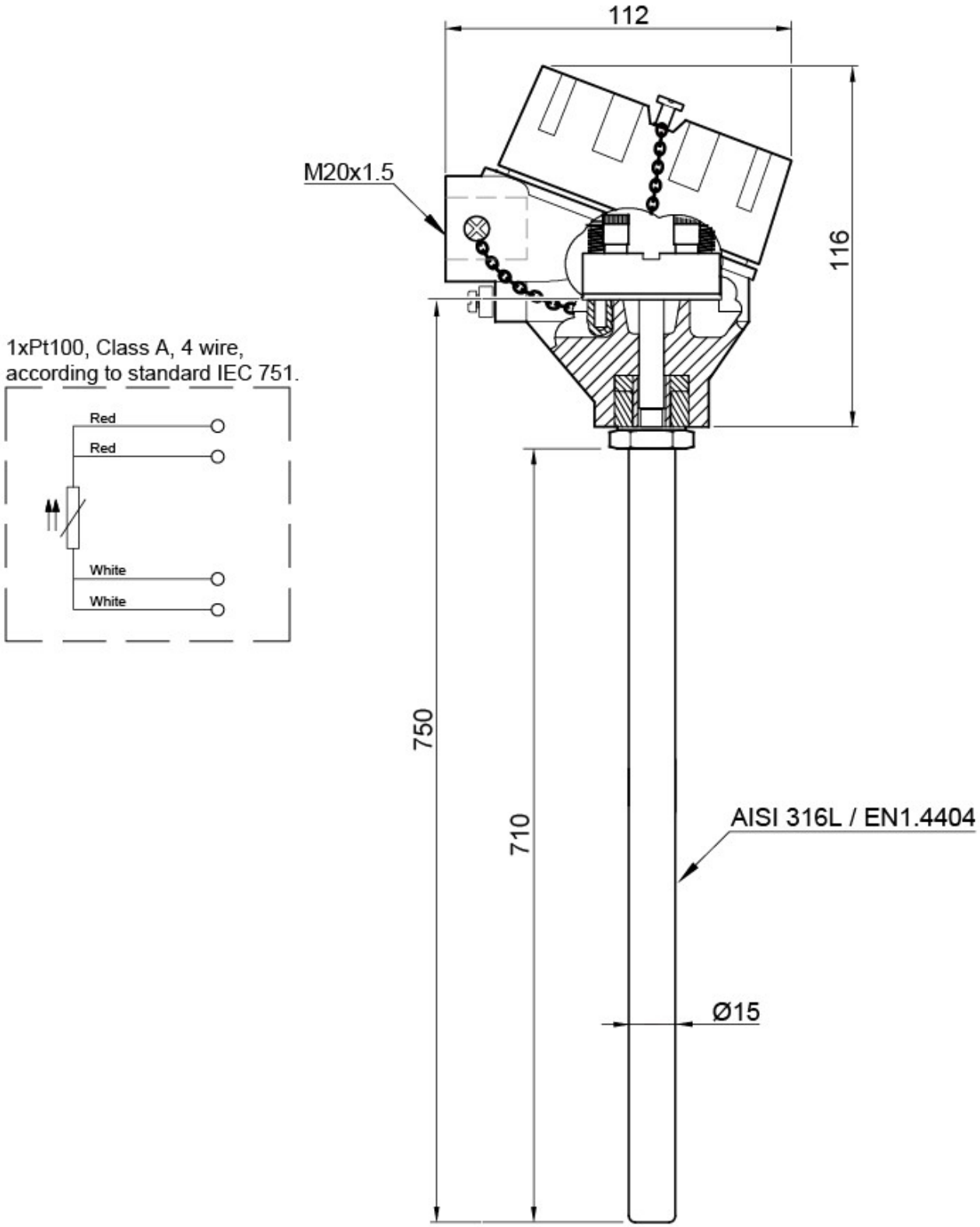

Technical information

Thermowell material	AISI 316L/EN1.4044 max. temperature +550 °C, temporarily +600 °C, AISI 446-1/EN1.4749 max. temperature +1100 °C, temporarily +1200 °C Other materials on request
Thermowell tip material	AISI 316L/EN1.4044 max. temperature +550 °C, temporarily +600 °C AISI 446-1/EN1.4749 max. temperature +1100 °C, temporarily +1200 °C Other materials on request
Tolerances Pt100 (IEC 60751)	AA tolerance ±0.1 + 0.0017 x t, operating temperature -50...+250 °C A tolerance ±0.15 + 0.002 x t, operating temperature -100...+450 °C B tolerance ±0.3 + 0.005 x t, operating temperature -196...+600 °C B 1/3 DIN, 0.1 °C +0.5%, B1/10 DIN 0.03 °C +0.5%, operating temperature -196...+250 °C
Tolerances thermocouple (IEC 60584)	Type J tolerance class 1 = -40...375 °C ±1.5 °C, 375...750 °C ±0.004 x t Type K and N tolerance class 1 = -40...375 °C ±1.5 °C, 375...1000 °C ±0.004 x t
*) **Temperature range Pt100**	-200...+550 °C, depending on housing and thermowell materials
*) **Temperature range thermocouple**	-200...+1200 °C, depending on thermocouple type and thermowell materials
Approvals	ATEX, IECEx
Quality certificate	ISO 9001:2015, ISO 14001:2015 and ISO 45001:2018 issued by DNV
IP rating	IP65, higher IP rating on request

Materials

Component	Material
Connection head HST	Acid-resistant steel (EN1.4541 / AISI 321)
Connection head B	Aluminum (Al)
Connection head N	Aluminum (Al)
Connection head D/H	Aluminum (Al)
Connection head D/H/D	Aluminum (Al)
Connection head D/W/H	Aluminum (Al)
Connection head D/W/H/D	Aluminum (Al)
Connection head EXD	Aluminum (Al) or stainless steel (EN1.4404 / AISI 316)
Lid gasket in connection head	Silicone or oil resistance rubber
Measurement element; RTD, resistance sensor	Pt100, stainless steel (EN1.4404 / AISI 316)
Measurement element; TC, thermocouple	Thermocouple material according to measurement type, sheath Inconel 600 or stainless steel (EN1.4404 / AISI 316)
Thermowell	stainless steel (EN1.4404 / AISI 316), heat resistant steel (EN1.4749 / AISI 446-1), other materials available on request

Dimensional drawings

Thermowell of the sensor is dimensioned from the bottom surface of the connection head. Only exception is ATEX compatible Ex d aproved sensor versions with smaller diameters than Ø22 mm thermowell. These ATEX sensors will require to have and additional sealing nut under the connection head. Dimensioning will in their cases begin from the sealing nut under the connection head.

Thermowell length L can be read directly from the product name. Length L is always expressed in millimeters [mm] in the product name and it is located after the fourth dash line. The length of the thermowell, length L, is displayed in the example pictures below:

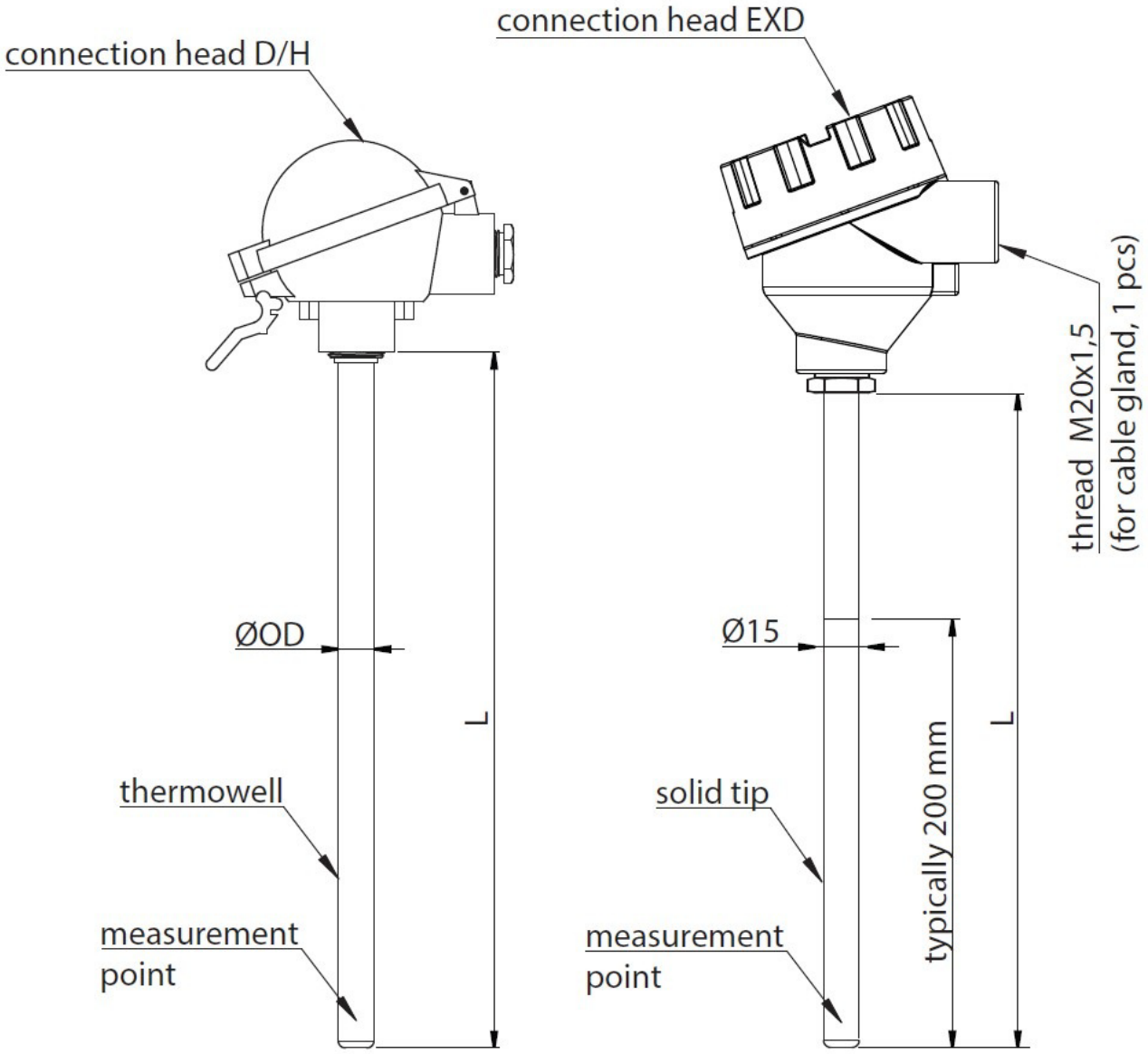

Solid tip

Solid tip is a tip of the thermowell that is made of solid instead of hollow structure. This is beneficial in applications where the medium under measurement is grinding, allowing the tip to wear more before puncture. Typical length of the solid tip at the thermowell is 200 mm and typical thickness is Ø22 mm. Diameter of the solid tip and rest of the thermowell are commonly the same. Picture below will show the structural difference between normal and solid tip:

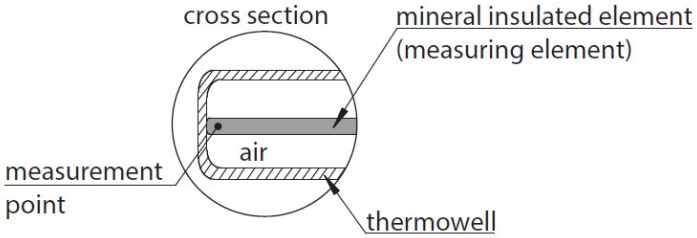

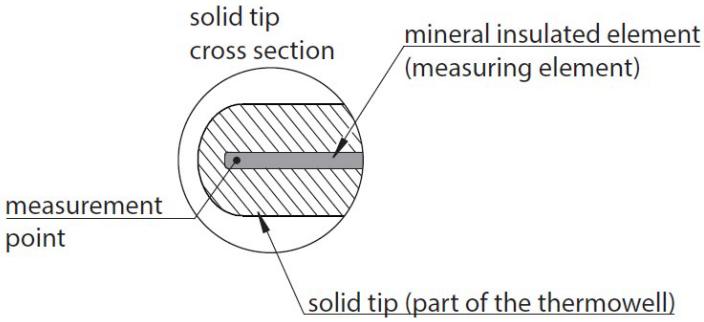

Mineral insulated element, that performs the actual temperature measurement, is typically 3 – 8 mm from the external surface of the thermowell tip. This distance varies according to the thermowell in use. Thermowell with thicker material thickness is increasing the distance. With customized solid tip this distance can be even greater. If specialized version of the sensor is needed, our sales team is more than happy to help, please contact our sales.

Temperature tolerance

The picture below will show the maximum temperature tolerance of the sensor. The given values must not be exceeded. If the temperature requirement at the installation site is higher, then consider the following options: is it possible to cool the sensor, can the distance between the hot measurement point and other parts of the sensor be increased, can the hot measurement point be thermally isolated from other parts of the sensor by using thermal insulators, or whether a temperature sensor of different type with a structure suitable for higher temperatures can be used.

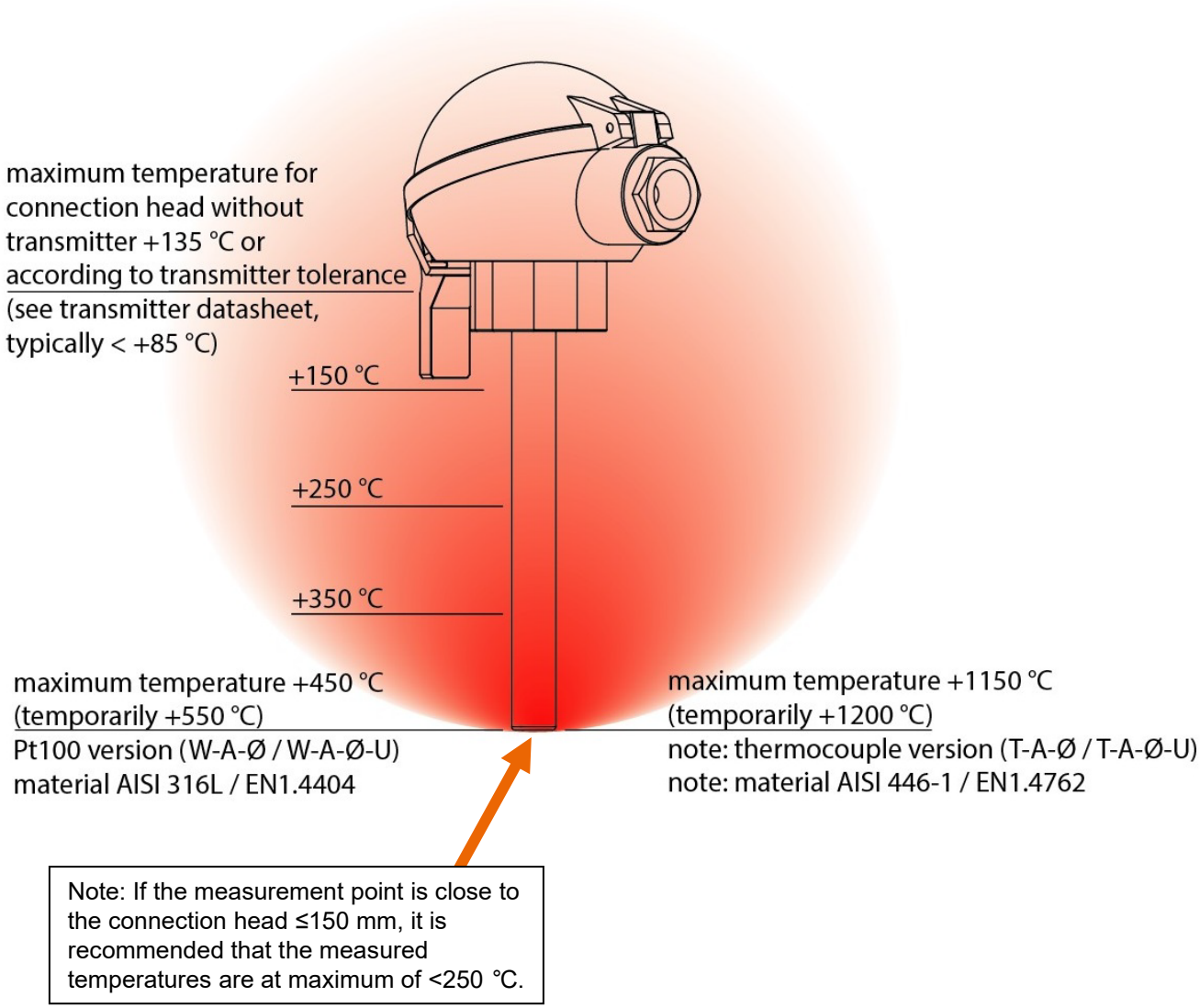

Note: If the measurement point is close to the connection head ≤150 mm, it is recommended that the measured temperatures are at maximum of <250 °C.

Installation instructions

Immersible temperature sensor (T-A-Ø / T-A-Ø-U or W-A-Ø / W-A-Ø-U) has wide range of installation methods. Fixed installation to application, where no liquid or gas tightness is required, is typically made by use of simple steel flange. Flange allows the sensor to be removed or mounted with just few bolts. If requirement is to have both fixed and tightly sealed installation, it is possible to use weldable flange with PTFE sealing bead. Sensor can also be directly welded to the application from the thermowell, in this case it is typical to use welding sleeve to improve the quality of the attachment. This method of installation will create a joint that is tightly sealed, but also tolerates high temperatures. Another way to install the sensor is to use gas tight compression fitting. Below is a list of typical ways of installation:

- installation with flange 1018378, for Ø15 mm thermowell, the installation is not tight
- installation with flange 1018382, for Ø22 mm thermowell, the installation is not tight
- installation with flange 1018383, for Ø32 mm thermowell, the installation is not tight
- installation with weldable flange 911984, for Ø15 mm thermowell, to Ø26 mm pipe, tight up to 1 bar pressure
- installation with weldable flange 911985, for Ø22 mm thermowell, to Ø32 mm pipe, tight up to 1 bar pressure
- installation with weldable flange 911986, for Ø32 mm thermowell, to Ø44 mm pipe, tight up to 1 bar pressure
- installation with welding, with or without welding sleeve
- installation with compression fitting 917347, for Ø15 mm thermowell, to G1” female thread, gas tight installation
- installation with compression fitting 999562, for Ø22 mm thermowell, to G1” female thread, gas tight installation

Installation with flange

Flange installation is suitable for applications where the fixed installation is required, but where the installation does not need to be liquid or gas tight. This type of flanges are available for thermowells with diameters of: Ø15 (1018378), Ø22 (1018382) and Ø32 (1018383). Installation is performed by first drilling hole that will fit the thermowell. This hole is typically 1-2 mm bigger than diameter of the thermowell. On both sides of this hole it is needed to carve out M9 threads for M9 bolts to attach the flange to the application. For this drilling you can use the dimensional drawings on following pages according to the flange in use.

After the drilling and carving of M9 threads flange can be mounted to the application. Sensor is then attached to the flange by taking the thermowell trought the hole to the target or medium under measurement. Sensor is attached to the flange with a bracket and 2 locking screws. Whole flange is not needed to be removed if only sensor is required to be changed. Picture below will illustrate the installation on flat surface:

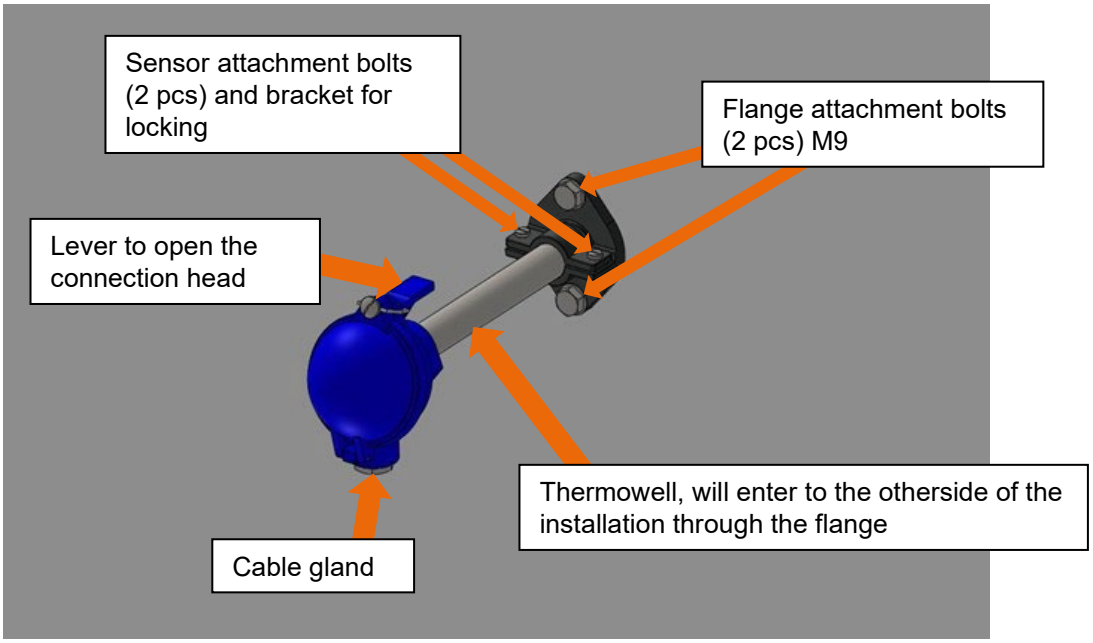

Flange Ø15, drawing 1018378

Picture below will show the dimensional drawing for flange 1018378, suitable for mounting sensor with Ø15 mm thermowell. Dimensions are in metric [mm]. Also drill drawing is presented for the preparing the installation site for the installation:

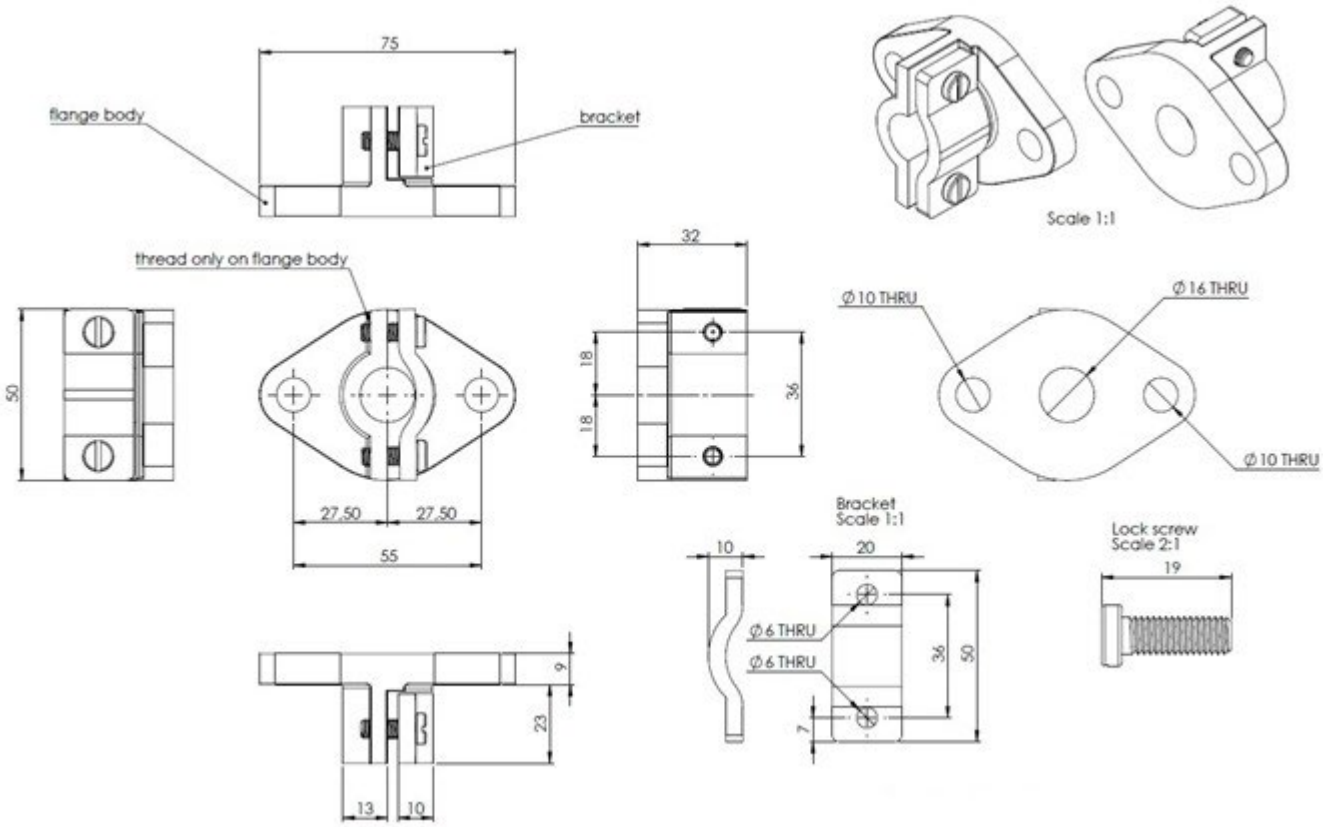

Drill drawing for the installation (not to scale):

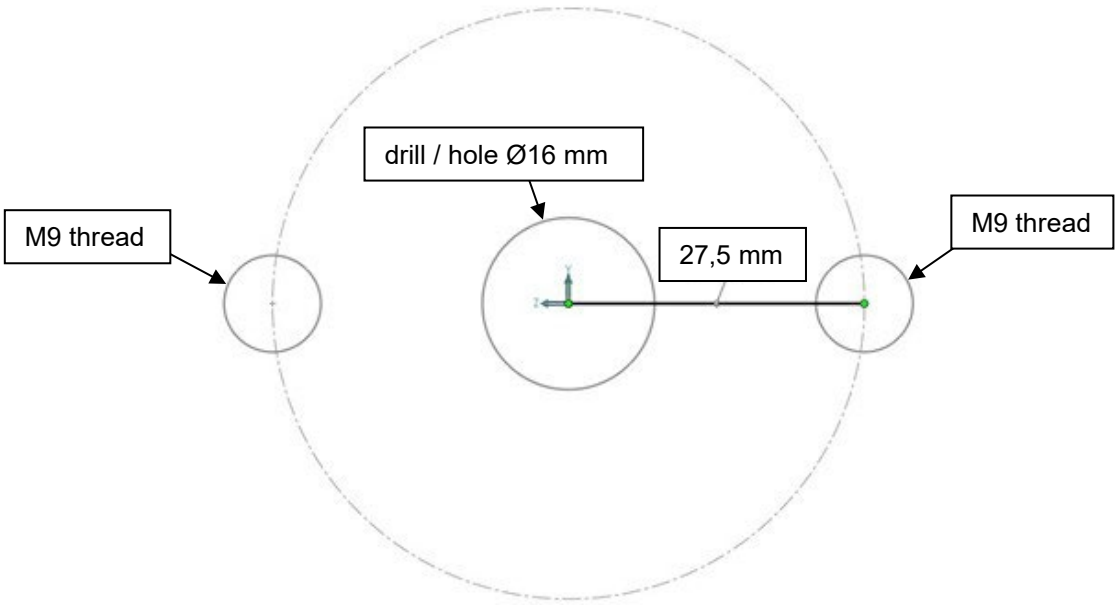

Flange Ø22, drawing 1018382

Picture below will show the dimensional drawing for flange 1018382, suitable for mounting sensor with Ø22 mm thermowell. Dimensions are in metric [mm]. Also drill drawing is presented for the preparing the installation site for the installation:

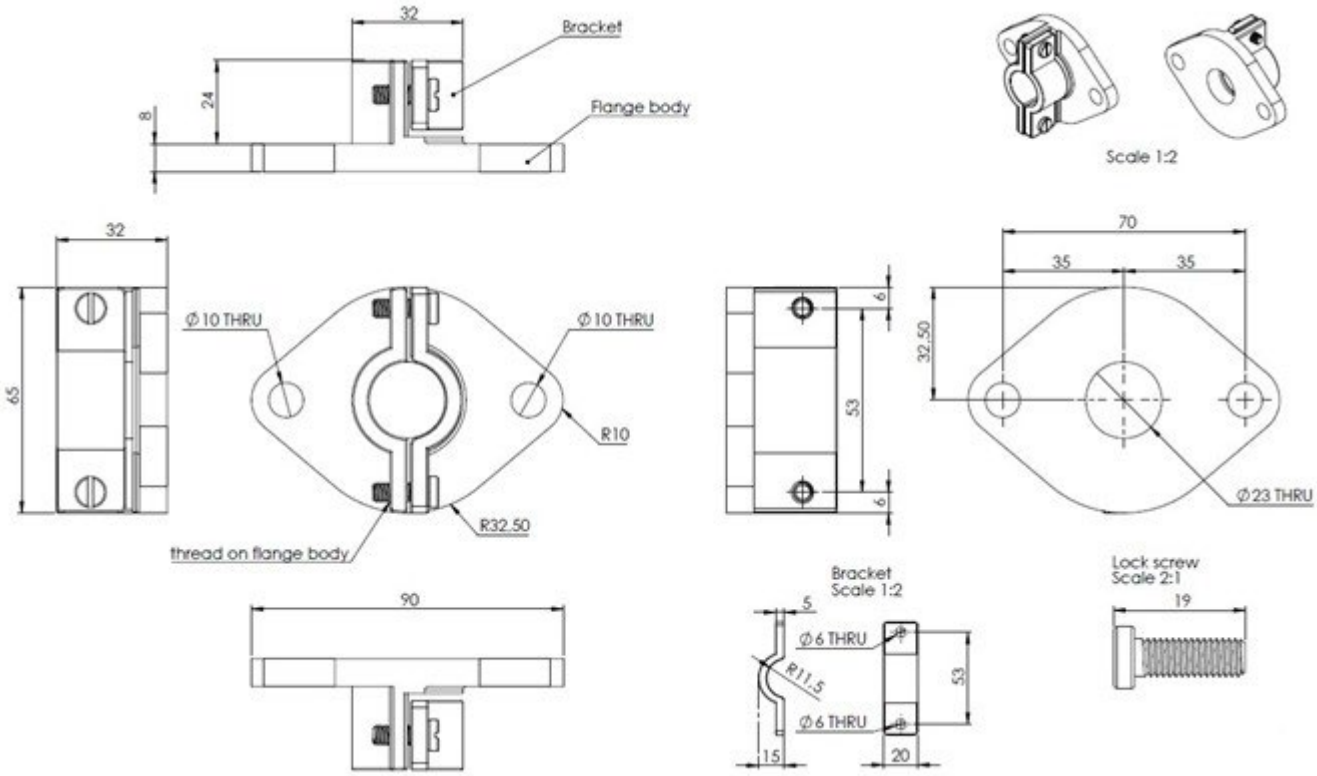

Drill drawing for the installation (not to scale):

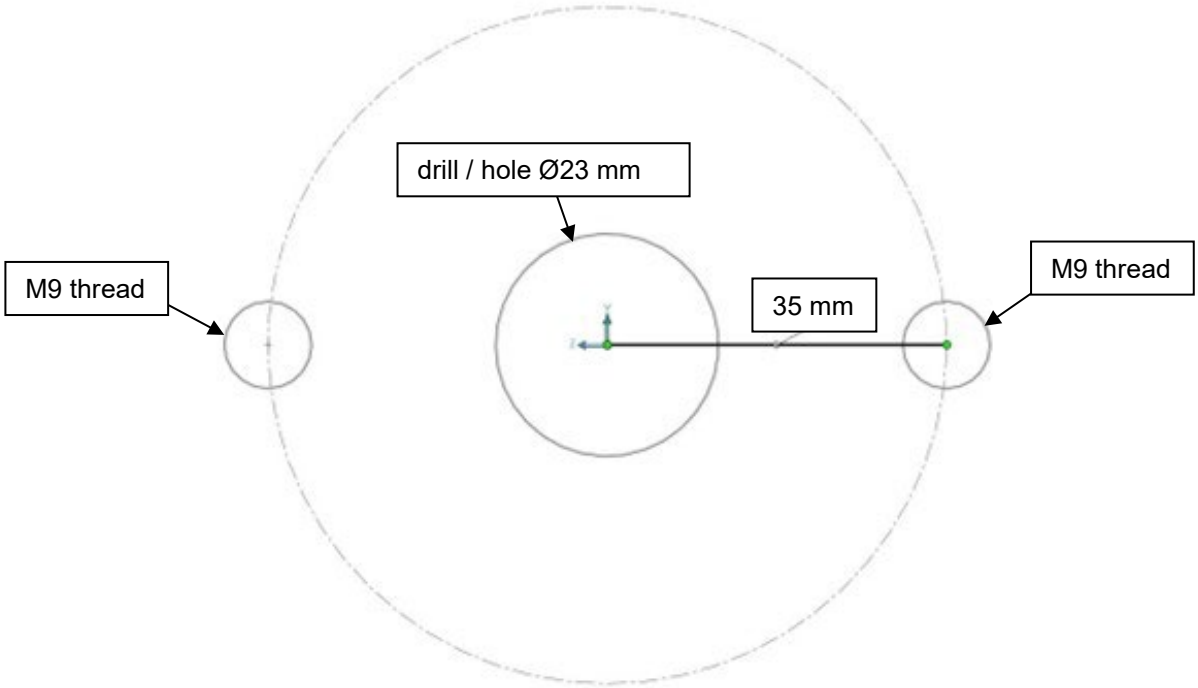

Flange Ø32, drawing 1018383

Picture below will show the dimensional drawing for flange 1018383, suitable for mounting sensor with Ø32 mm thermowell. Dimensions are in metric [mm]. Also drill drawing is presented for the preparing the installation site for the installation:

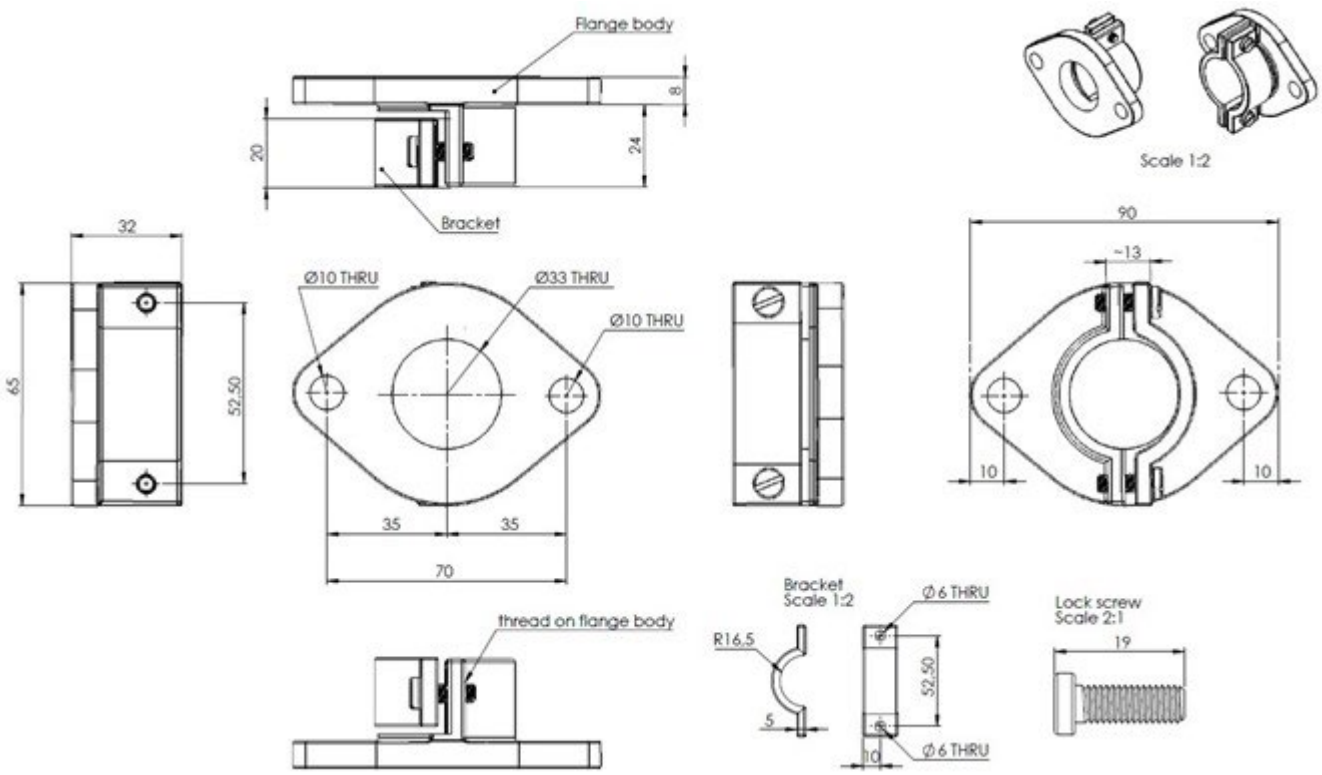

Drill drawing for the installation (not to scale):

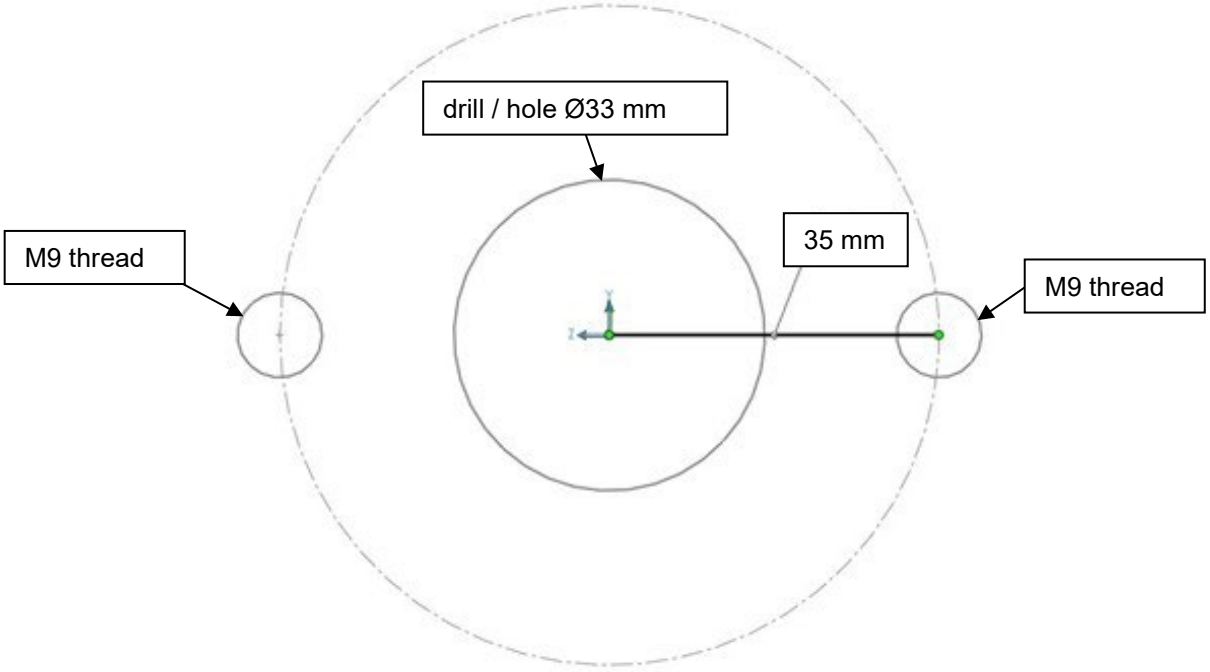

Installation with weldable flange

Weldable flange installation is suitable for applications where the sensor is required to be installed as fixed installation, and where the installation must be sealed as liquid and gas tight. It is good to note that the installation with this type of weldable flange is not able to hold high pressure, or high temperatures at the flange joint location. For high pressure applications it is recommended to use flanged temperature sensor type T-F / W-F.

Weldable flanges are available for thermowell with diameters of: Ø15 (911984), Ø22 (911985) and Ø32 (911986). Weldable flange is two-part flange. First the counter flange part is welded to the process application, typically to a open pipe end. Welding is made to the external bottom surface of the counter flange, and to the outer surface of the process pipe, sealing the seam formed by these two. This two-part flange has a PTFE sealing bead inside, which will be compressed against the thermowell, creating a tight sealed surface around the thermowell during the installation. PTFE sealing bead can tolerate 1 bar pressure and up to +260 ℃ maximum continuous temperature.

Material of the weldable flange is coated cast steel. Prior to welding, it is recommended to grind off any coating from the intended area of the weld. Welding should be done as 360° around the flange and pipe, if gas and liquid tightness is required. Picture below will show then installation of the sensor with weldable flange:

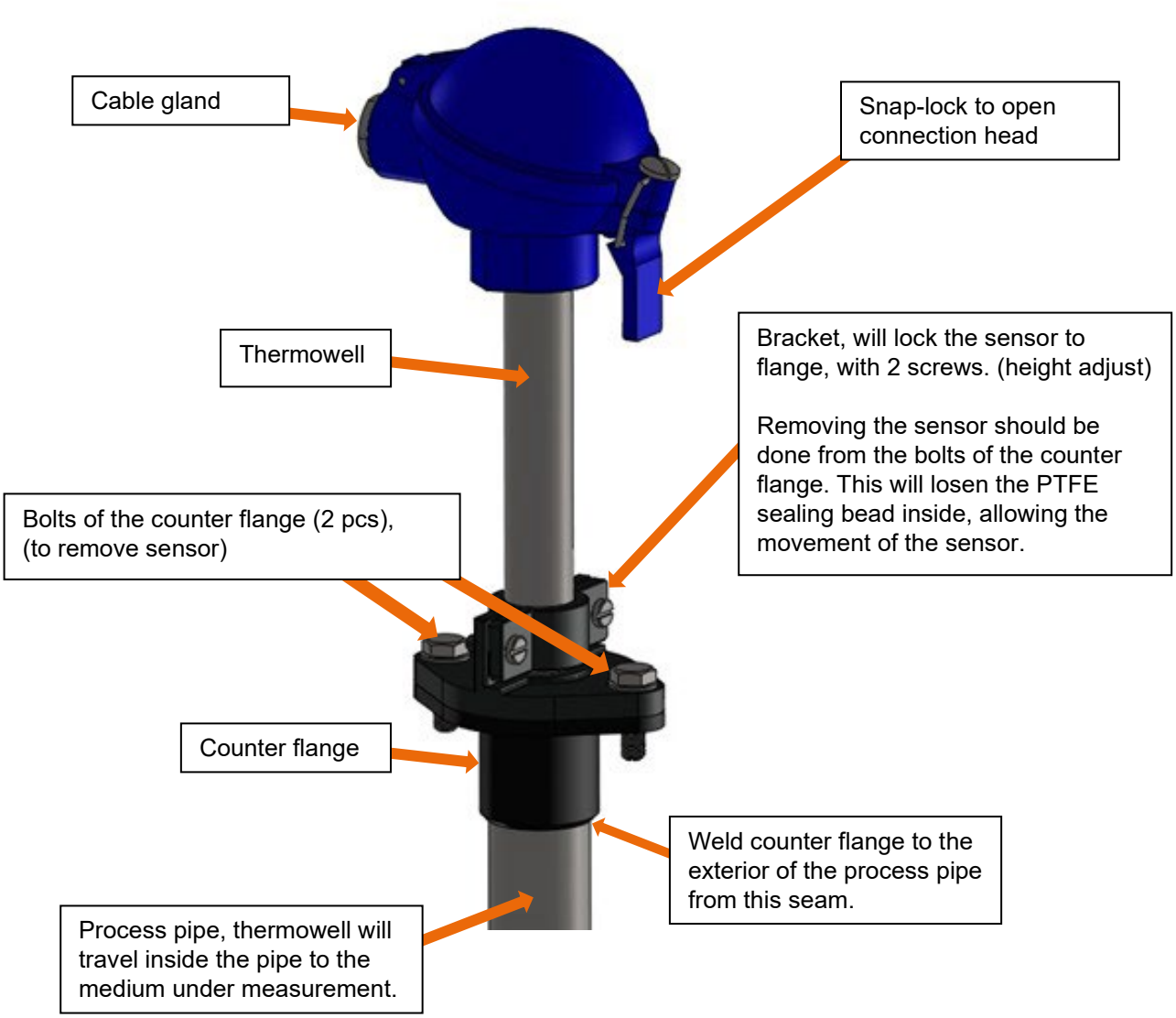

Weldable flange Ø15, drawing 911984

Picture below will show the dimensions and parts of weldable flange Ø15 mm, dimensions are in metric [mm]:

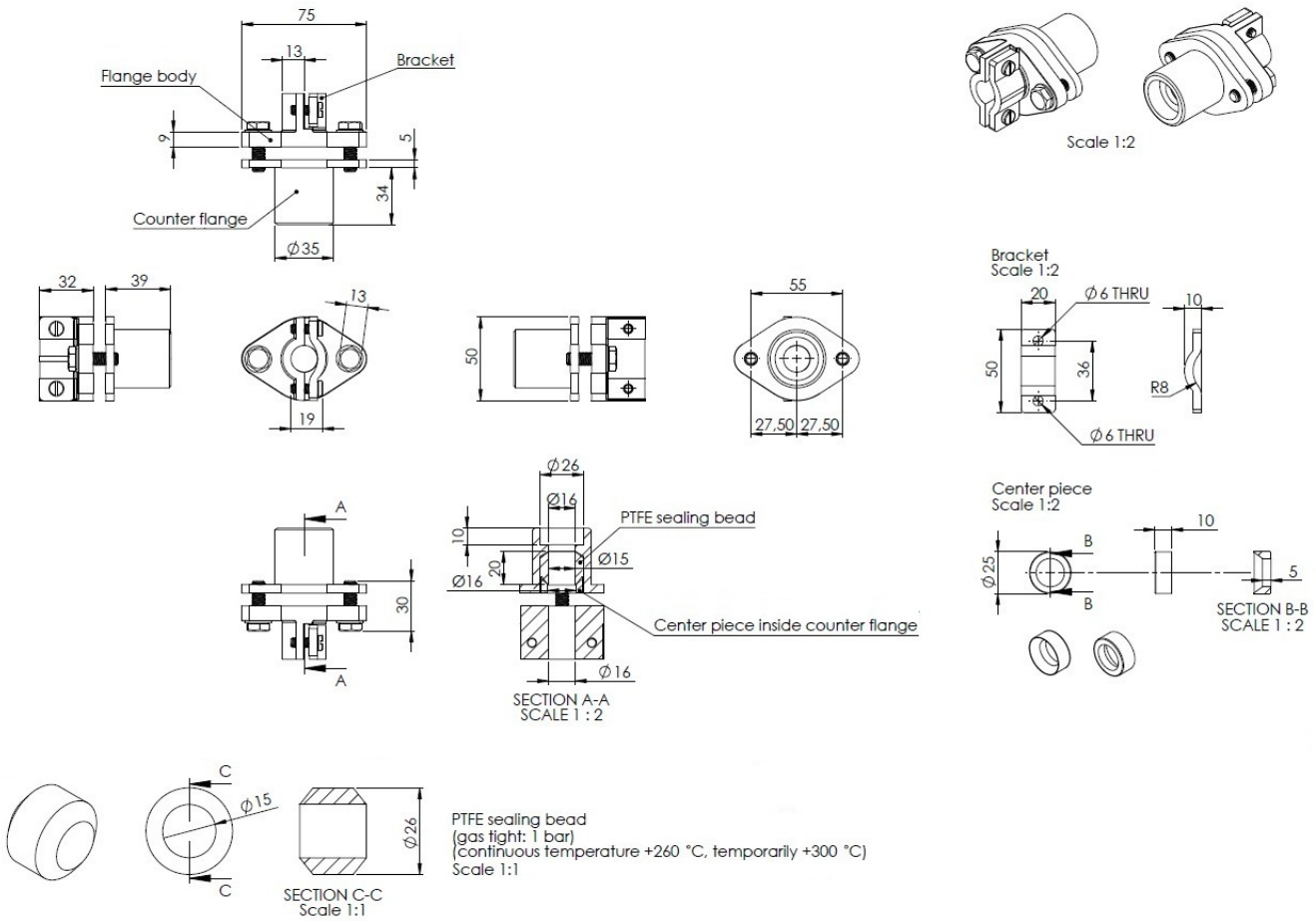

Installation in steps: clean the bottom edge surface of counter flange from the coating (= clean the surface where the welding is about to be done), put and weld the counter flange to the end of the pipe, take the flange body and attach it to the thermowell with bracket and two bolts (note: attachment height here will be the immersion depth), put the PTFE sealing bead in the middle of the counter flange, put the center piece over the PTFE sealing bead in the counter flange (flat surface of the center piece in upward direction), finally attach the flange body with thermowell to the counter flange so that the thermowell will go trough the PTFE sealing bead and the center piece will squeeze the bead tight agains the thermowell wall when fittings are tightened.

Weldable flange Ø22, drawing 911985

Picture below will show the dimensions and parts of weldable flange Ø22 mm, dimensions are in metric [mm]:

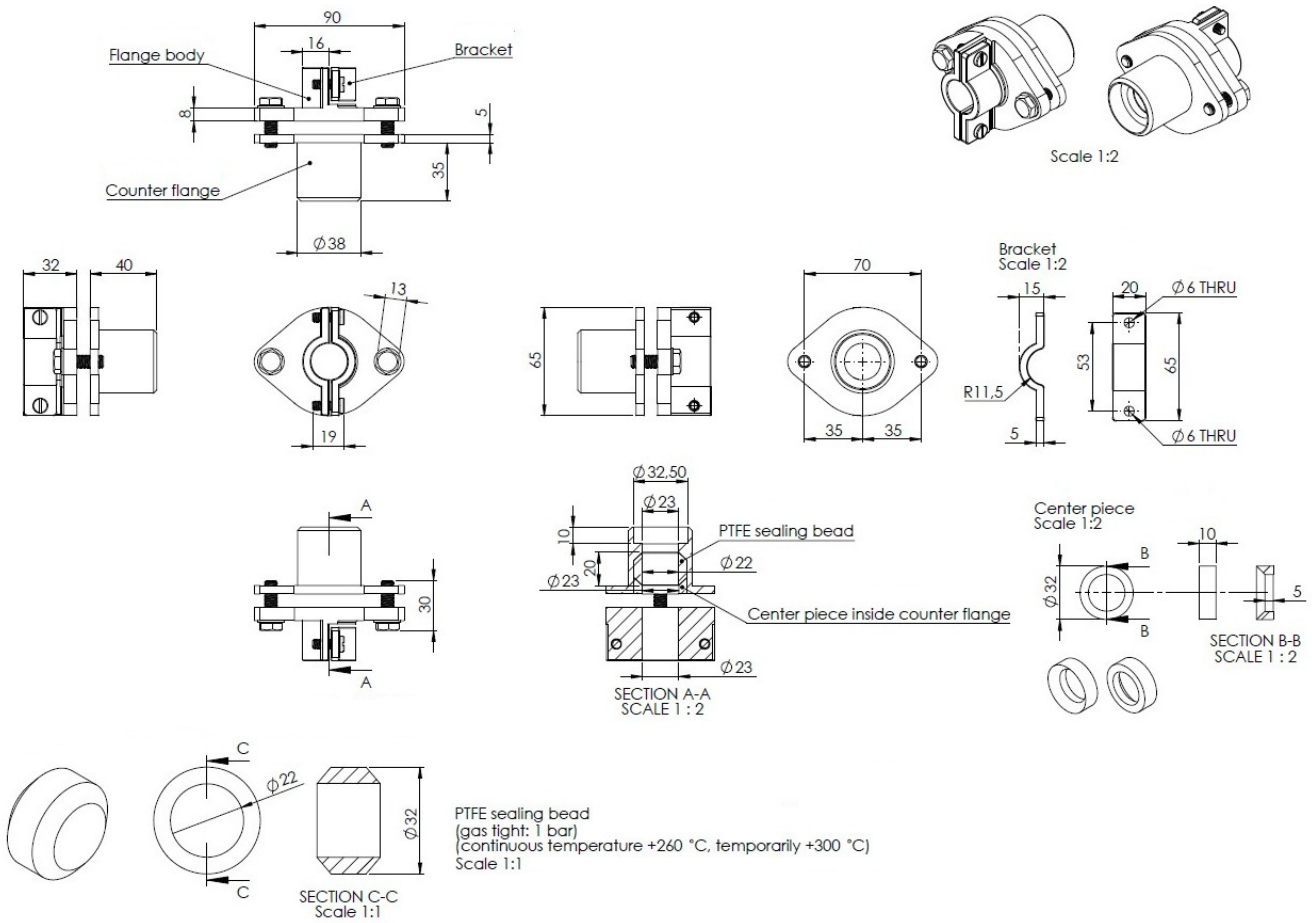

Installation in steps: clean the bottom edge surface of counter flange from the coating (= clean the surface where the welding is about to be done), put and weld the counter flange to the end of the pipe, take the flange body and attach it to the thermowell with bracket and two bolts (note: attachment height here will be the immersion depth), put the PTFE sealing bead in the middle of the counter flange, put the center piece over the PTFE sealing bead in the counter flange (flat surface of the center piece in upward direction), finally attach the flange body with thermowell to the counter flange so that the thermowell will go trough the PTFE sealing bead and the center piece will squeeze the bead tight agains the thermowell wall when fittings are tightened.

Weldable flange Ø32, drawing 911986

Picture below will show the dimensions and parts of weldable flange Ø32 mm, dimensions are in metric [mm]:

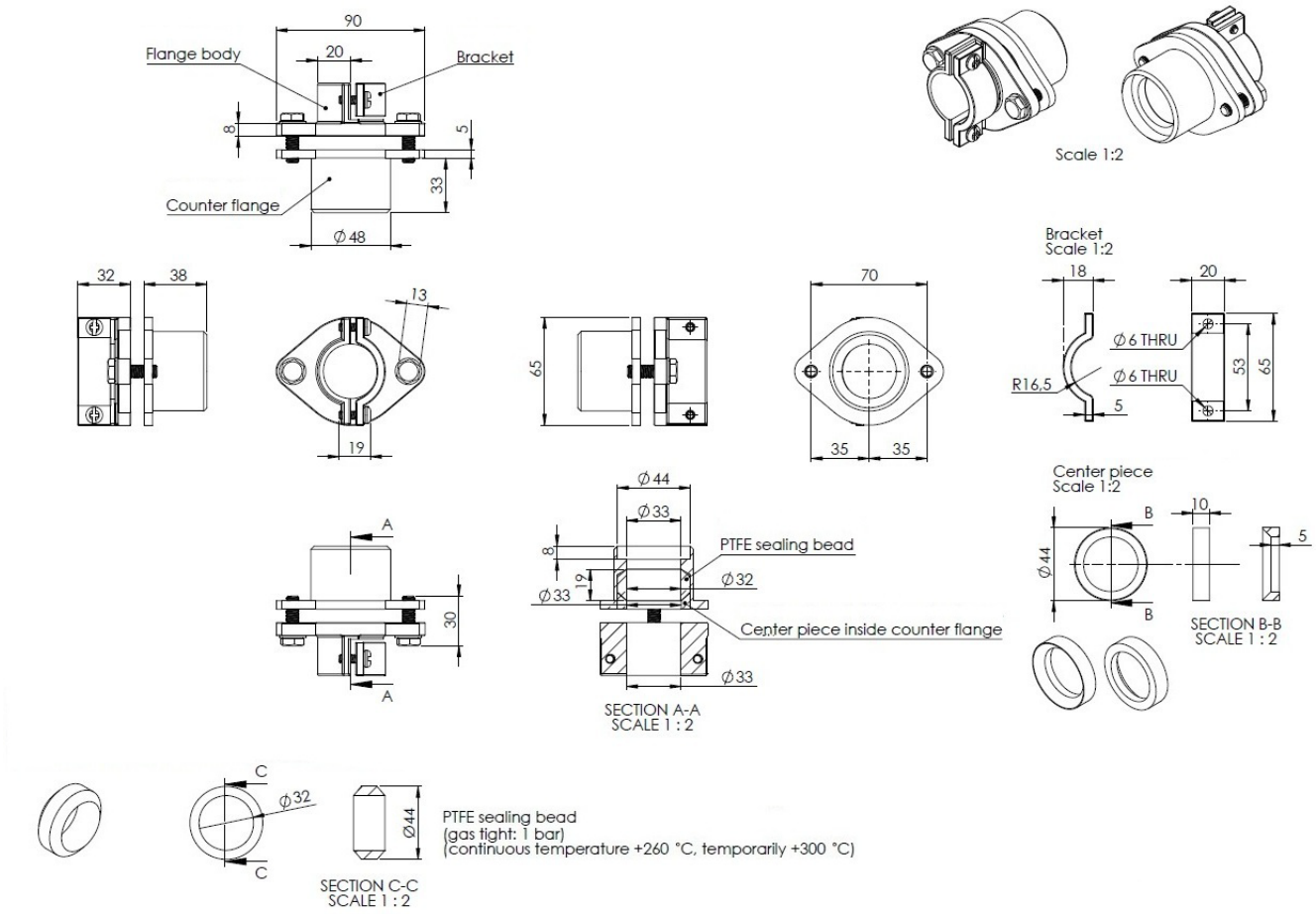

Installation in steps: clean the bottom edge surface of counter flange from the coating (= clean the surface where the welding is about to be done), put and weld the counter flange to the end of the pipe, take the flange body and attach it to the thermowell with bracket and two bolts (note: attachment height here will be the immersion depth), put the PTFE sealing bead in the middle of the counter flange, put the center piece over the PTFE sealing bead in the counter flange (flat surface of the center piece in upward direction), finally attach the flange body with thermowell to the counter flange so that the thermowell will go trough the PTFE sealing bead and the center piece will squeeze the bead tight agains the thermowell wall when fittings are tightened.

Using a welding sleeve

Welding sleeves are available as sensor mounting accessories. Sleeves are suitable for applications where the installation surface is thin and need for additonal support exits. The sleeve is first welded to the application at intallation site, after the welding sleeve can be used to connect the sensor by welding it to the sleeve from the thermowell.

The sleeve material must always be selected according to the target material of installation site in order to obtain the most even and high-quality weld. When the materials are the same, welding work is easier. The material of the welding sleeve can be inspected from the material stamping on the side of the sleeve.

Before starting welding work, always make sure that there are sufficient work permits for welding work to begin.

Installation steps:

- Drill a hole, large enough to fit in the narrower lower section of the sleeve part.
  (Note: The hole to be drilled must be smaller than the overall diameter of the welding sleeve, or the sleeve will completelly fall throught)
- Welding sleeve is placed in to the hole so that the narrower lower section of the sleeve will go in to the hole and rest of the sleeve remains outside, typically in upwards direction.
- Welding sleeve is then welded to the hole from the bottom edge of the sleeve.
- It is recommended to weld the sleeve 360° all around the hole, for maximum mechanical durability, and tightness of the fitting.
- After the welding work is completed, cooled and any inspection approval is obtained for the welding, sensor can be welded to the sleeve. This welding is done to the thermowell of the sensor and to the top edge of the welding sleeve. Thermowell will go through the welding sleeve and the seam of these two is welded tight. For tightness and mechanical durability it is recommended to make the welding, all around the seam, 360°.

Picture below will illustare sensor installed to application by using welding sleeve:

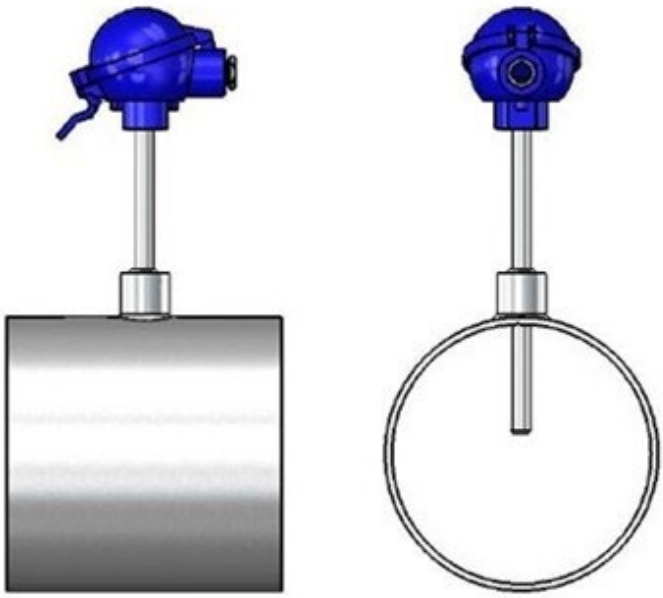

Installation with compression fitting

Sensor can be installed by the use of compression fitting to any application with female G1” thread. G1” thread is typical thread for compression fittings used with immersible temperature sensor, but other threads do exist. Compatible thermowell diameters for G1” thread compression fitting installation are Ø15 and Ø22 mm. Compression fitting has internal sealing bead which will tighten around the thermowell in the installation, creating tight seal. The sealing bead can be losen after installation, allowing the adjustment of the height or immersion depth of the temperature sensor thermowell. Installation with compression fitting will create gas tight seal, but it will not tolerate high pressures. Sealing bead material will vary, according to the fittings.

Compressing fittings commonly used with immersible temperature sensor are:

- Compression fitting 917347, thread G1”, for thermowell Ø15 mm
- Compression fitting 999562, thread G1”, for thermowell Ø22 mm

Picture below will show example of compression fitting with parts (compression fitting 999562):

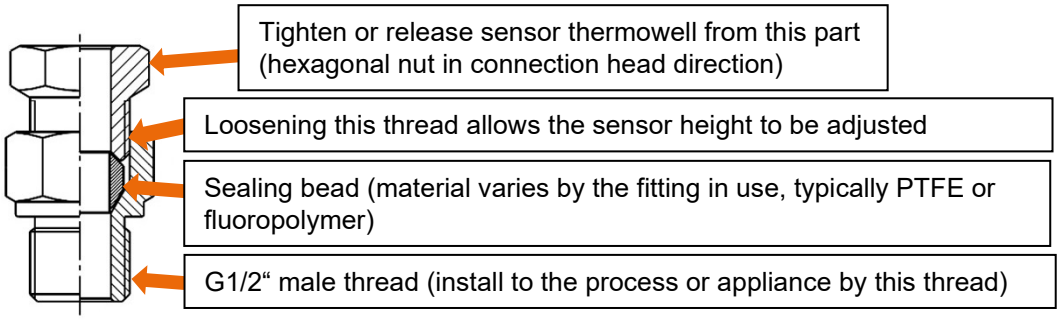

Picture below will show intallation with compression fitting:

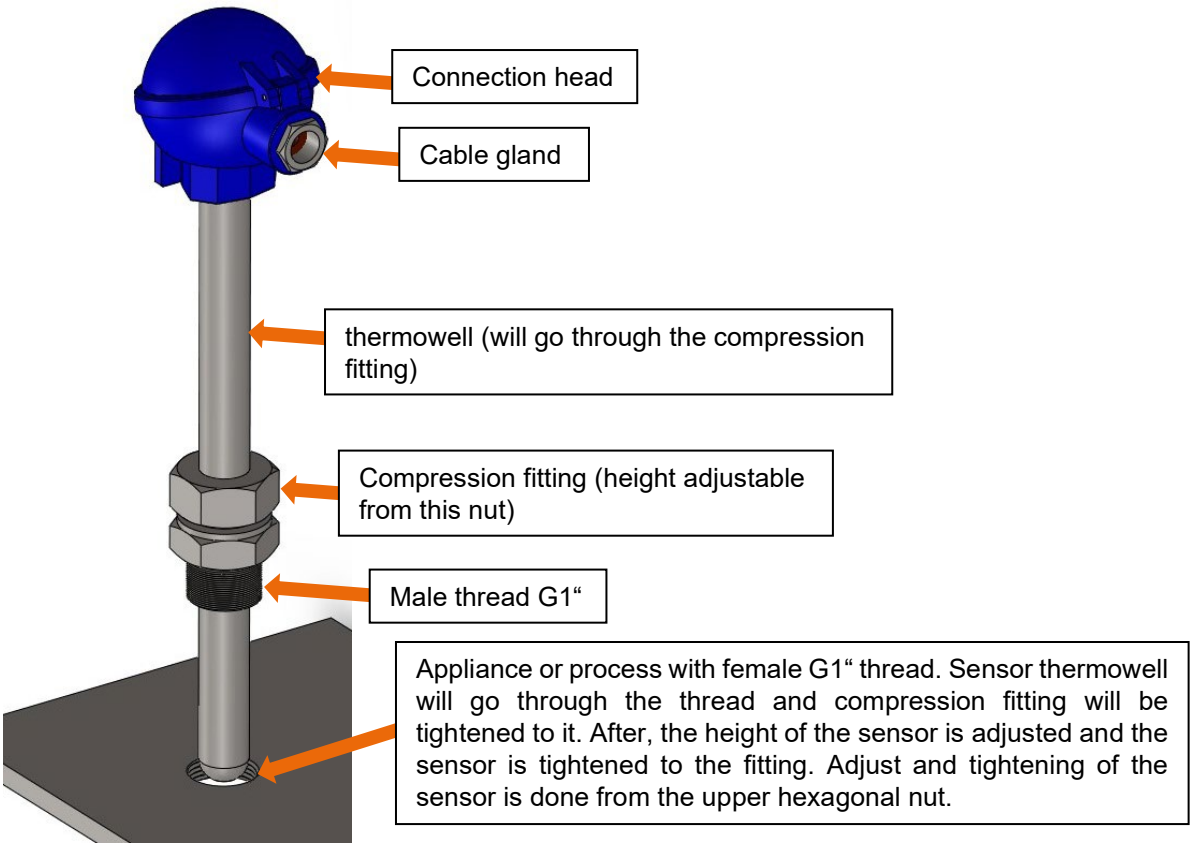

Connection heads

Connection heads differ in terms of various features, such as: material, number of cable entries, approvals, color, IP rating, internal and external dimensions, but there are also other variable characteristics.

Before placing an order, it is a good to discuss about the connection head and the sensor type with our sensor sales team. This will ensure that the connection head meets the needs in terms of features, and that the installation accessories and other accessories required by the customer are included in the delivery. For example, not all connection heads are supplied with cable gland, as the cable gland to be used is sometimes determined by the diameter of the cable leaving the connection head. Possible certificate approvals also have to be considered. There may also be several solutions for one case.

The type of the connection head can be read from the product name, according to the code key, after the third dash line. The connection head type in the example below is the Ex i version of the D/H connection head. Ex i approved connection head is always indicated in the product name as the suffix — EXI.

Example of the product name: T — A — 22 — D/H — 1000 — K — 1 — TR — EXI

Connection heads suitable for sensor type T-A-Ø / T-A-Ø-U and W-A-Ø / W-A-Ø-U are following:

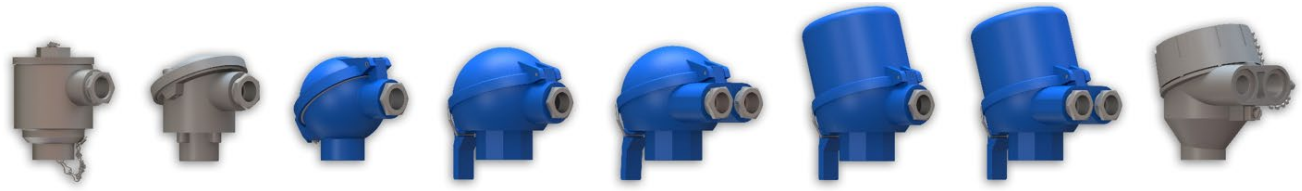

HST B N D/H D/H/D D/W/H D/W/H/D EXD

Connection head EXD will meet the Ex d -requirements for hazardous area with potentially explosive atmosphere. Also Ex i and Ex d double-certified connection heads are available.

Technical information

Connection head	Material	Coating/ Powder paint colour	Lid has fall prevention	Lid has snap lock	Transmitter mount cabability	Cable gland threads [pcs]	Delivered with standard basic cable gland	Cable gland thread (as standard)	Cable gland threads (custom options, check availability)	Internal grounding point	External grounding point	ATEX (Ex i)	ATEX (Ex d)
HST	AISI321/ EN1.4541	No	Yes	No	1	1	Yes	M20x1,5	G½, ½NPT	No	No	No	No
B	Aluminum (Al)	Grey	No	No	1	1	Yes	M20x1,5	-	No	No	No	No
N	Aluminum (Al)	Blue	Yes	No	1	1	Yes	M20x1,5	G½, ½NPT	No	No	No	No
D/H	Aluminum (Al)	Blue	Yes	Yes	1	1	****Yes	M20x1,5	G½, ½NPT	Yes	No (***Yes)	Yes	No
D/H/D	Aluminum (Al)	Blue	Yes	Yes	1	2	****Yes	M20x1,5	G½, ½NPT	Yes	No (***Yes)	Yes	No
D/W/H	Aluminum (Al)	Blue	Yes	Yes	2	1	****Yes	M20x1,5	G½, ½NPT	Yes	No (***Yes)	Yes	No
D/W/H/D	Aluminum (Al)	Blue	Yes	Yes	2	2	****Yes	M20x1,5	G½, ½NPT	Yes	No (***Yes)	Yes	No
EXD	Aluminum (Al) (*stainless steel)	Grey	Yes	No	1	1 (**2)	****No	M20x1,5	-	Yes	Yes	Yes	Yes

*) EXD connection head is available as stainless steel, default delivery material is aluminum.
**) EXD connection head can be manufactured with 2 cable gland openings, as default there is only 1.
***) All Ex i approved connection heads are with external grounding point.
****) All Ex i approved connection heads are delivered with blue Ex i approved cable gland(s), that will replace any existing cable gland(s).

Connection head HST

The HST connection head is designed for environments where conditions are corrosive, and where acid resistance is particularly required. The connection head is made of uncoated acid-resistant steel (AISI 321/EN1.4541). When using the HST connection head, other parts of the sensor are typically also made of acid-resistant steel. However, this is case-specific and can be agreed with our sensor sales.

The HST connection head is supplied with one M20x1.5 threaded cable gland, suitable for a maximum diameter of approximately Ø14 mm. To achieve a better protection rating, it is recommended that the standard cable gland is replaced with a SKINTOP® INOX series acid-resistant cable gland. Any M20x1.5 threaded cable gland can be used with the connection head.

Picture below is an example of the standard cable gland supplied with the connection head on the left. On the right side in the picture there is the acid-resistant cable gland from the SKINTOP® INOX series:

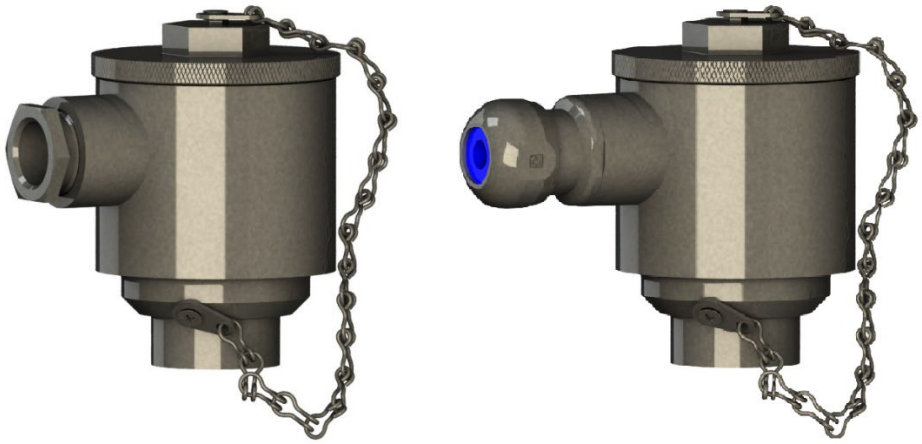

The HST connection head does not have any grounding terminal. The HST connection head also does not have a Ex d or Ex i approved version suitable for explosive atmospheres.

Opening and closing the lid

Note: The connection head contains live parts, make sure that it is possible to open the connection head.

The lid of the HST connection head is attached with a thread. The lid is opened by turning the lid counterclockwise. Correspondingly, the lid can be closed by turning it clockwise. The lid does not have any other locking mechanism, but unintentional opening is challenging when tightened properly. The top of the lid has a shape suitable for a hex key, for easy access. The lid is attached to the side of the connection head with a chain, which is a fall prevention measure.

Tightness of the lid is done with Ø50x2 mm O-ring silicone sealing gasket, which is located at the top of the thread. Temperature range for the sealing gasket is in the area: –40 … +150 °C. Condition of the sealing gasket should always be inspected when opening the lid. If there is any gamage on the gasket it should be replaced. The correct location of the O-ring sealing gasket is shown in the following picture:

Dimensional drawing HST

The space for a temperature transmitter mounted inside the HST connection head is Ø45x30 mm. The dimensions are shown below:

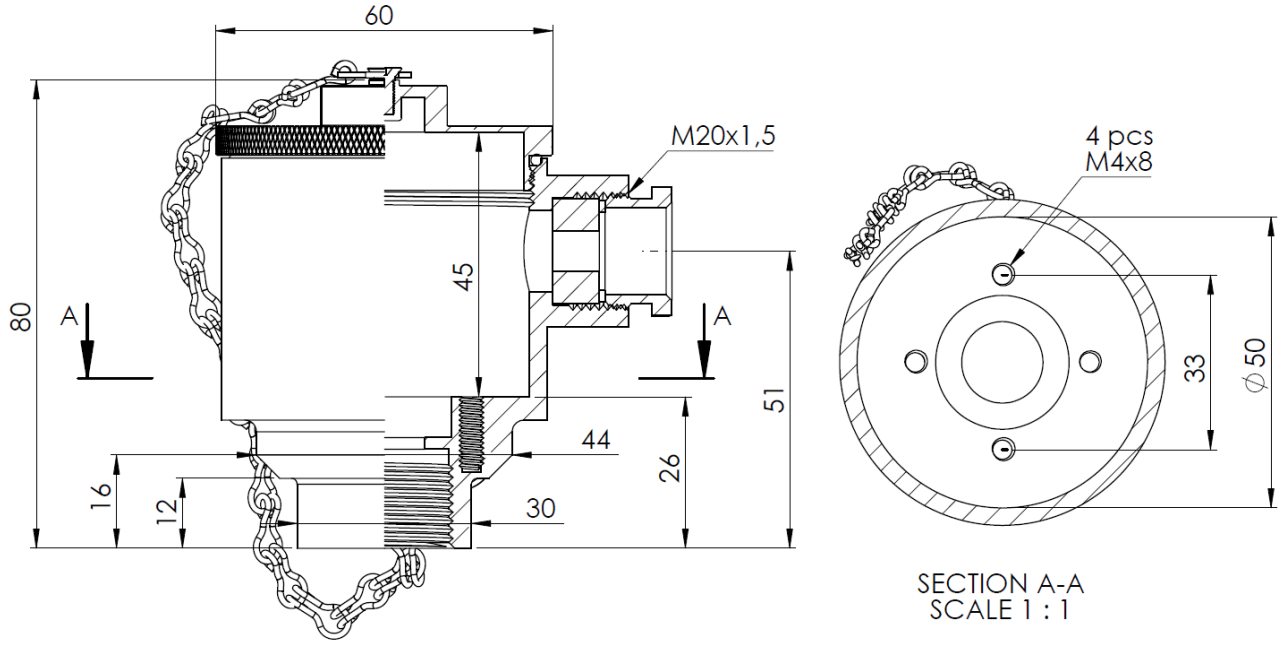

Cable gland thread

The cable entry thread in the HST connection head is M20x1.5. The cable entry thread can be made with the following threads on a case-by-case basis: G½ and NPT½. However, the availability of these custom threads, other than M20x1.5, must always be checked separately with our sensor sales and it is also good to note that a cable gland suitable for the custom thread is not necessarily supplied with the connection head.

Connection head B

The B type connection head is made of aluminum. The connection head is supplied with one cable gland. Material of the cable gland is zinc-plated brass. The cable gland is suitable for a maximum diameter of approximately Ø14 mm. The cable entry thread is M20x1.5 and SKINTOP® cable gland can be used to achieve improved protection rating. Any M20x1.5 threaded cable gland can be used with the connection head. Picture below is an example of the standard cable gland supplied with the connection head on the left, and the SKINTOP® cable gland that guarantees a better protection rating on the right:

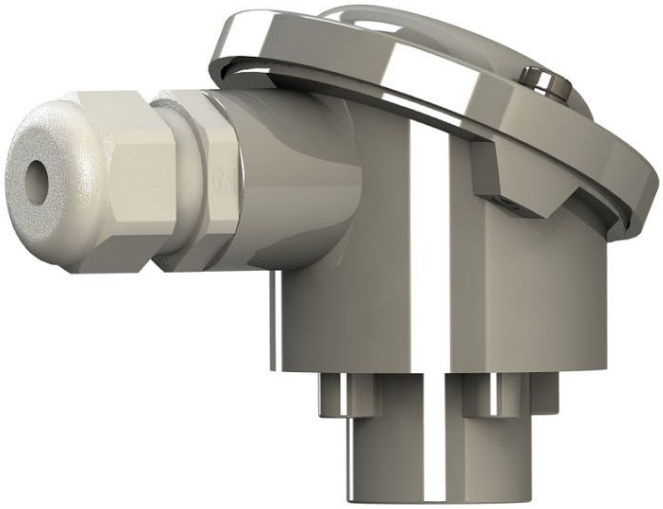

Connection head type B does not have any grounding terminal. Connection head type B also does not have Ex d or Ex i approved versions for explosive atmospheres.

Opening and closing the lid

Note: The connection head contains live parts, make sure that it is possible to open the connection head.

Note: The lid and parts of it can fall when opening procedure is performed. Before opening the lid, make measures to prevent parts from falling.

To open the connection head user will need to loosen the screws of the lid, on the top surface of the cover. It is usually sufficient to loosen the screws until the threads become visible at the surface of the cover. The cover can then be lifted. The screws are shown in the picture:

There is a sealing gasket on the bottom side of the lid. Always inspect the condition of the gasket when opening. The material of the sealing gasket is oil-resistant rubber, with a temperature range of: –40 … +100 °C.

The connection head is closed by securing lid back to the place by tightening the screws. When closing the connection head, make sure that the washers on the screws are in place on the top surface of the lid. Also see that the sealing gasket is correctly positioned under the lid before placing it back to the unit. It is recommended to take turns while tightening the screws, so that the lid will set evenly. The picture below will show the sealing gasket on the lid in correct position:

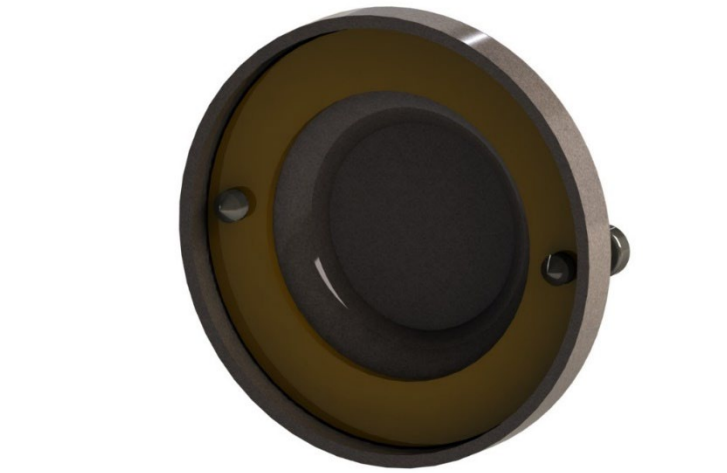

Dimensional drawing B

The space for a temperature transmitter mounted inside the B connection head is Ø45x30 mm. The dimensions are shown below:

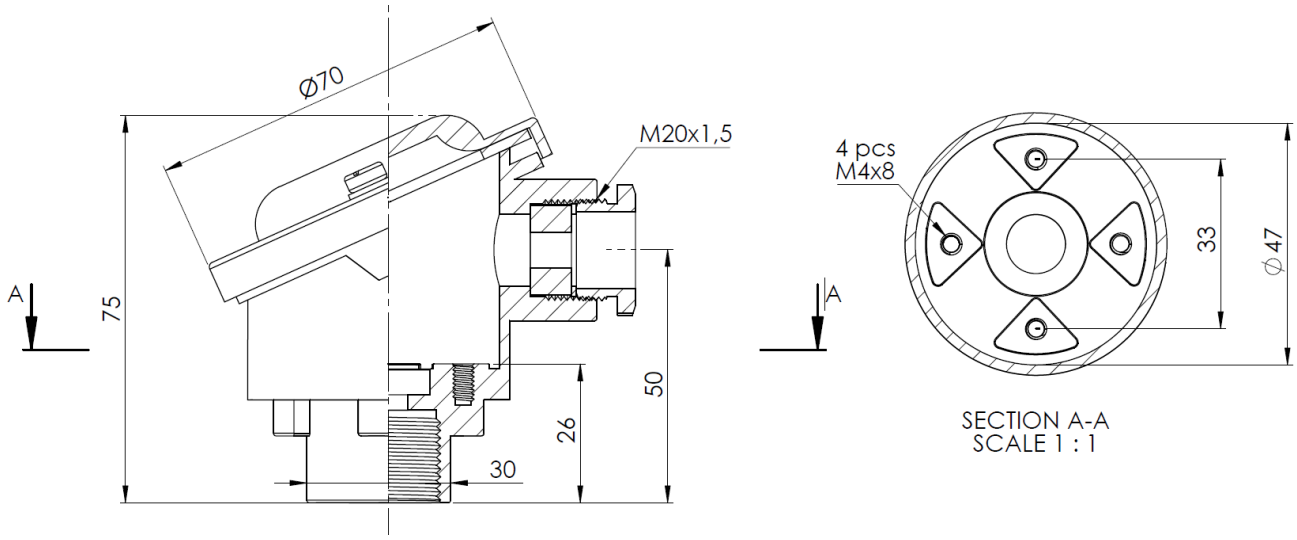

Connetion head N

Connection head type N is made of aluminum by die-casting method. The connection head is supplied with one cable gland, which is suitable for a maximum cable with diameter of approximately Ø14 mm. The cable entry thread is M20x1.5 and SKINTOP® cable gland can be used to achieve improved protection rating. Any M20x1.5 threaded cable gland can be used with the connection head. Picture below is an example of the connection head with a standard cable gland on the left and SKINTOP® cable gland on the right:

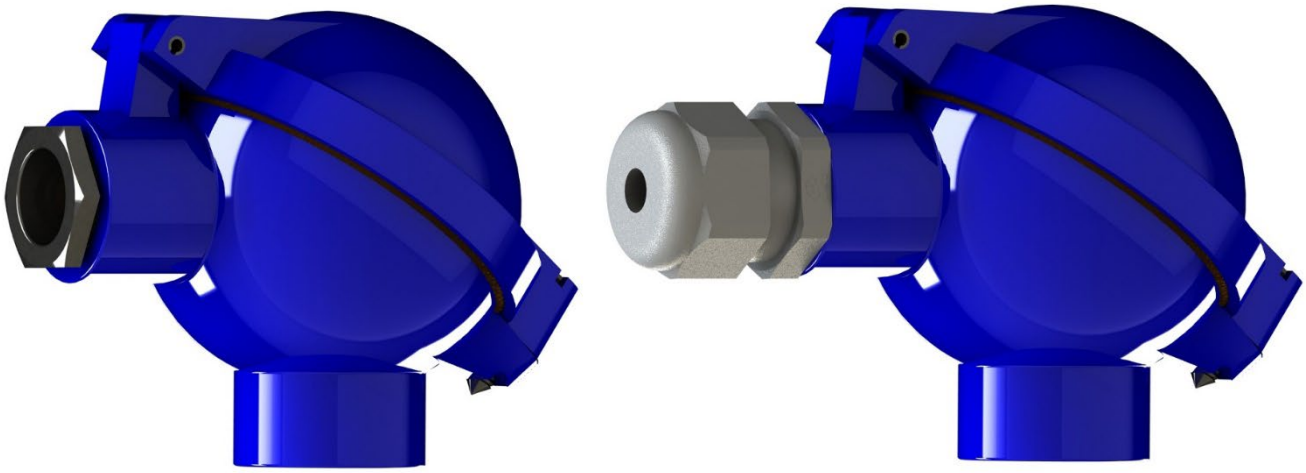

Connection head type N does not have any grounding terminal. Connection head type N also does not have Ex d or Ex i approved versions for explosive atmospheres.

Opening and closing the lid

Note: The connection head contains live parts, make sure that it is possible to open the connection head.

The connection head is opened by loosening the screw. The screw is fall protected, do not to try to remove it completely. Removing the screw will cause damage to the thread. After loosening the screw, the lid can be opened and it will open in the direction of the hinge, over the cable gland. The picture below shows the location of the screw in the connection head:

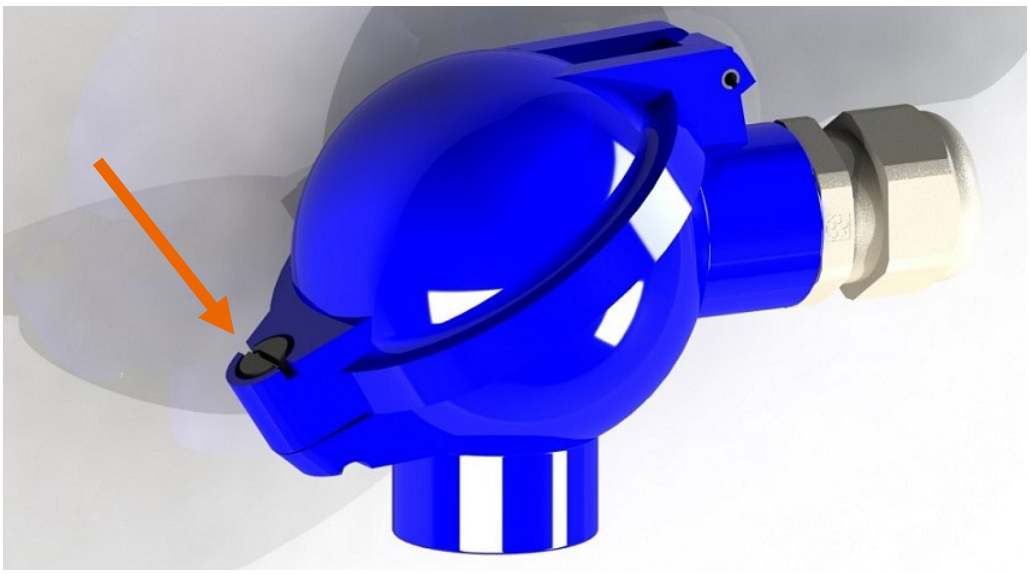

There is a sealing gasket on the bottom side of the lid. Always inspect the condition of the gasket when opening the unit. The sealing gasket is Ø60x4 mm, silicone O-ring, with a temperature range of: -40 ... +150 °C. The connection head is closed by tightening the screw on the lid back into place. Picture below will show the sealing gasket on the lid in correct position:

Dimensional drawing N

The space for a temperature transmitter mounted inside the N connection head is Ø42x14 mm. The dimensions are shown below:

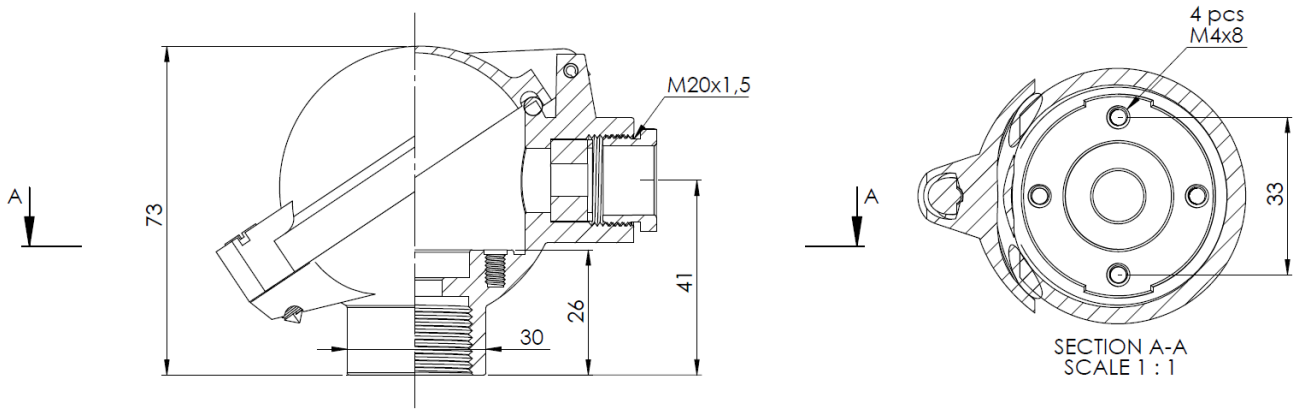

Cable entry thread

The cable entry thread in the type N connection head is M20x1.5. The cable entry thread can also be customized to G½ or NPT½ depending on the case. Availability of the custom thread, other than M20x1.5, must always be separately checked with our sensor sales. It is also good to note that the cable gland suitable for the custom thread is not necessarily supplied with the connection head.

Connection head D/H

Connection head type D/H is made of aluminum by die-casting method. The connection head is supplied with one cable gland, which is suitable for a maximum diameter of approximately Ø14 mm. The cable entry thread is M20x1.5 and SKINTOP® cable gland can be used to achieve improved protection rating. Any M20x1.5 threaded cable gland can be used with the connection head. Picture below is an example of the D/H connection head with a standard cable gland on the left and SKINTOP® cable gland on the right:

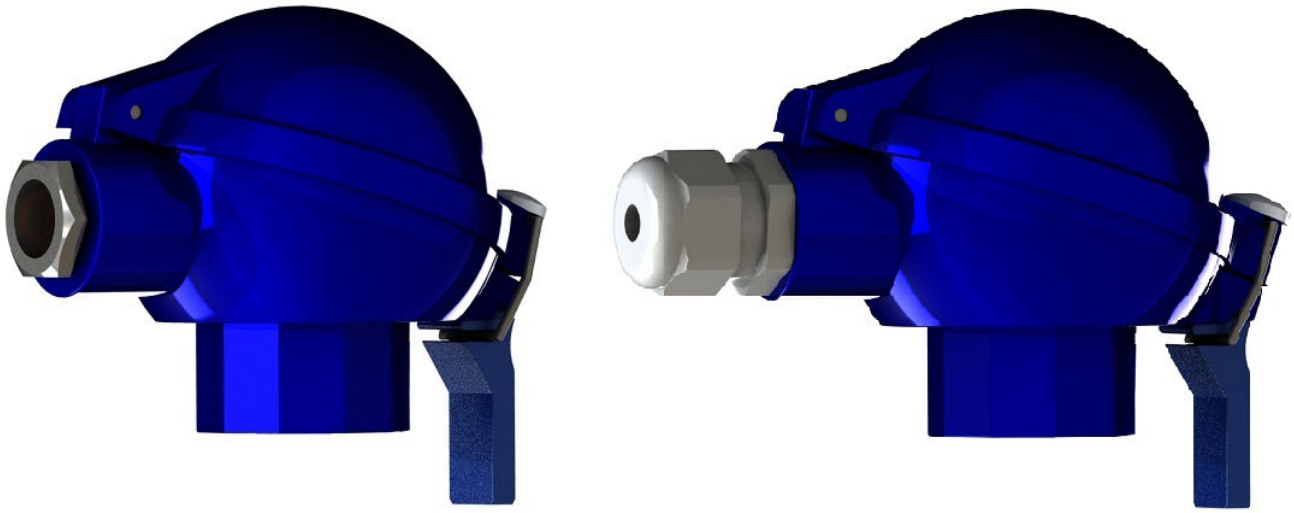

Ground

D/H connection head has threadless blank for fixing the ground. Blank is located inside the connection head, on the side of the interior. The cable ground conductor and/or cable shield braid can be connected to the blank, for example using a cable connector, after the thread has been added to the blank. Thread can be added by using common thread tools. The depth of the well in the blank is 1 cmn and the recommended thread to be added is M5.

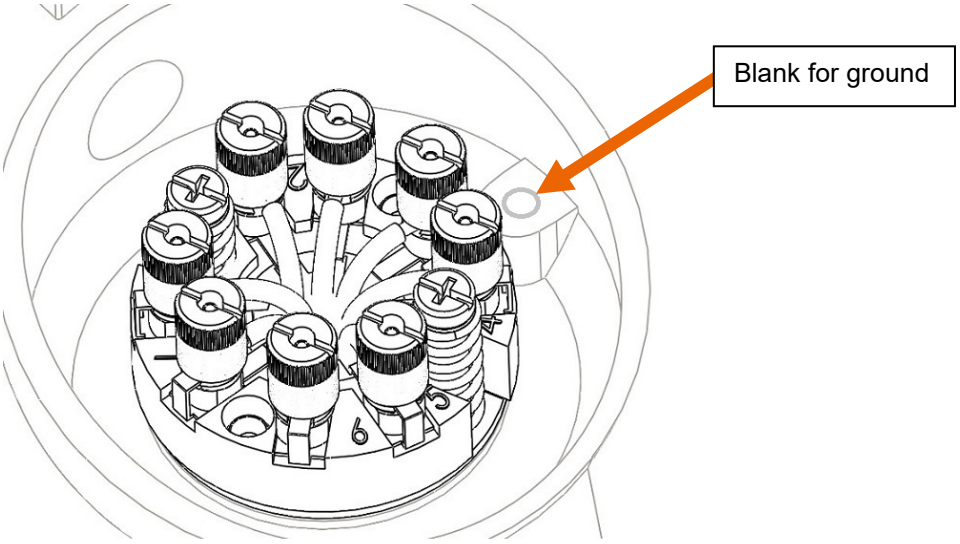

Opening and closing the lid

Note: The connection head contains live parts, make sure that it is possible to open the connection head.

Lid of the connection head is opened by turning the quick-release lever. The quick-release lever is located on the opposing side to the cable gland. By turning the quick release, the lid of the connection head is realeased and it will open to the direction of the hinge, over the cable gland. Closing the lid is accomplished by repeating the opening movement in reverse direction. The following picture below shows the location of the quick release and the direction in which the lever should be turned to open the connection head:

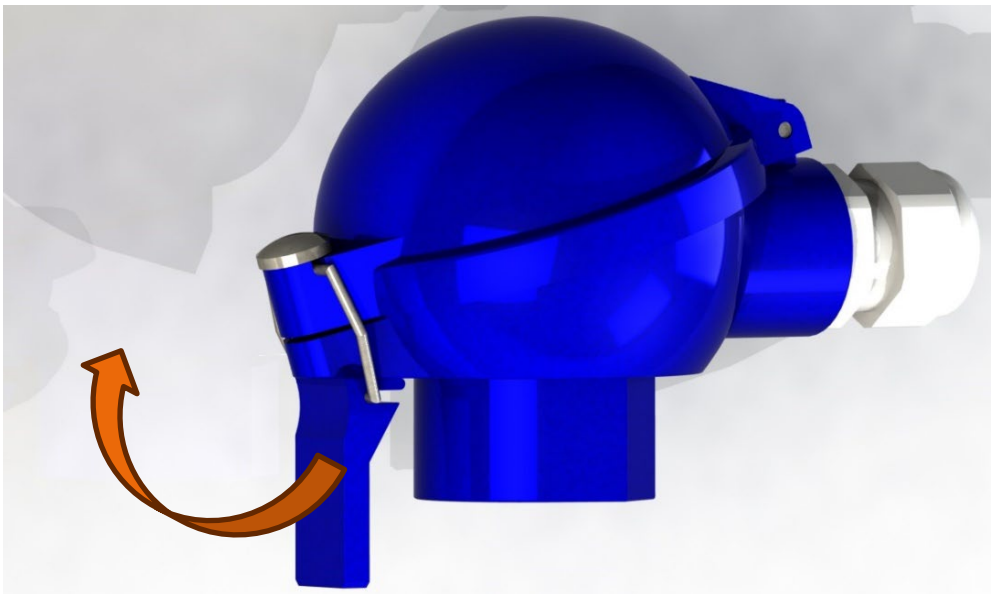

There is a sealing gasket on the bottom side of the lid. Inspect the condition of the gasket when opening the unit. The sealing gasket is Ø74x4 mm, silicone O-ring, with a temperature range of: -40 ... +150 °C. Picture below will show the sealing gasket on the lid in correct position:

Dimensional drawing D/H

The space for a temperature transmitter mounted inside the D/H connection head is Ø45x40 mm. The dimensions are shown below:

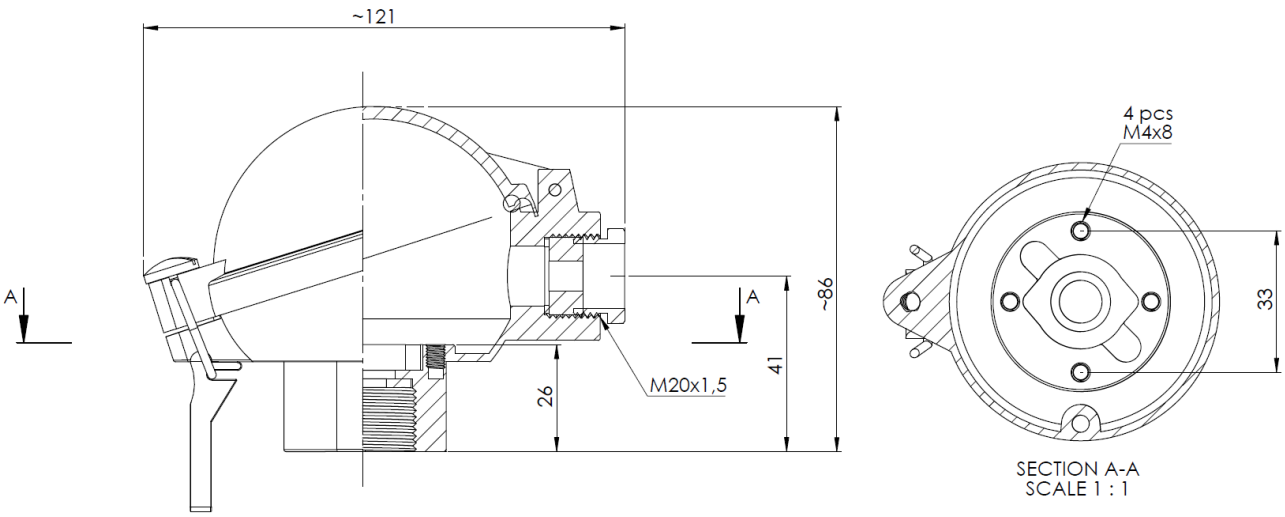

Cable entry thread

The cable entry thread in the type D/H connection head is M20x1.5. The cable entry thread can also be customized to G½ or NPT½ depending on the case. Availability of the custom thread, other than M20x1.5, must always be separately discussed with our sensor sales. It is also good to note that the cable gland suitable for the custom thread is not necessarily supplied with the connection head.

Ex i approved version

The Ex i approved product version is suitable for use in potentially explosive areas where the use of intrinsically safe Ex i circuits as a protection method is sufficient. These potentially explosive areas may contain flammable gases, vapors, combustible dust or flying particles. Similar facilities are common in the oil and gas, chemical, food and beverage, and pharmaceutical industries.

The Ex i approved product version meets the requirements of the intrinsically safe protection method and can be used in intrinsically safe Ex i circuits.

The Ex i approved product version with D/H connection head includes one blue Ex i approved cable gland. The cable gland is suitable for Ø7 – Ø13 mm cable and it will also work as a strain relief. The cable entry thread in the Ex i approved version of the D/H connection head is M20x1.5. The picture shows the D/H connection head with the blue Ex i cable gland:

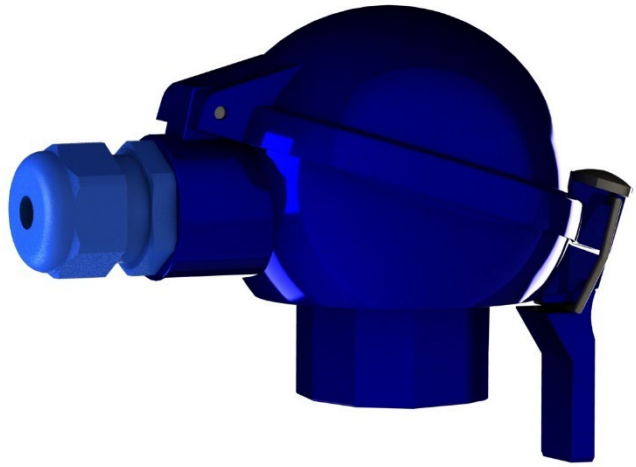

Note: The cable gland of an Ex i approved product must never be replaced with a non-Ex i approved cable gland.

Ex i approved product is supplied with a dimensional drawing, which will confirm that the product design, structure and used components displayed in the drawing will meet the requirements of the standard. The design of the product according to the dimensional drawing may not be changed. In some cases, the dimensional drawing may contain guiding princibles for the correct use of the product, and thus should never be ignored.

Ex i approved product can always be identified by the product name, since the product name has a suffix -EXI. The product name is shown on the sensor nameplate. There is also information about the applicable room classifications in the nameplate. Nameplate can typically be found on the side of the connection head. The picture below is an example of the nameplate of an Ex i approved sensor with a D/H connection head. Nameplate example is in accordance with ATEX and IECEx certificates:

Lapp Automaatio Oy
Äyritie 18 FI-01510 Vantaa Finland
+358 (0) 20 764 6410
EPIC® SENSORS
MADE IN FINLAND
www.lapp.fi

LAPP

EESF 21 ATEX 043X, IECEx EESF 21.0027X
T-A-22-D/H-1000-K-1-CB-EXI
Prod: xxxxxxx S/N: 220231-1234567-1
II 1G Ex ia IIC T6…T3 Ga
II 1/2G Ex ib IIC T6…T3 Ga/Gb
II 1D Ex ia IIIC T135 °C Da
II 1/2D Ex ib IIIC T135 °C Da/Db

CE 0537 Ui=30V Ii=100mA Pi=750mW Ci= Li=
Refer to User Manual for Specific Conditions of Use

The Ex i approved D/H connection head has two grounding terminals, both with fitting screws included. One grounding terminal is internal and other one is external. The locations of grounding terminals is shown in the picture below:

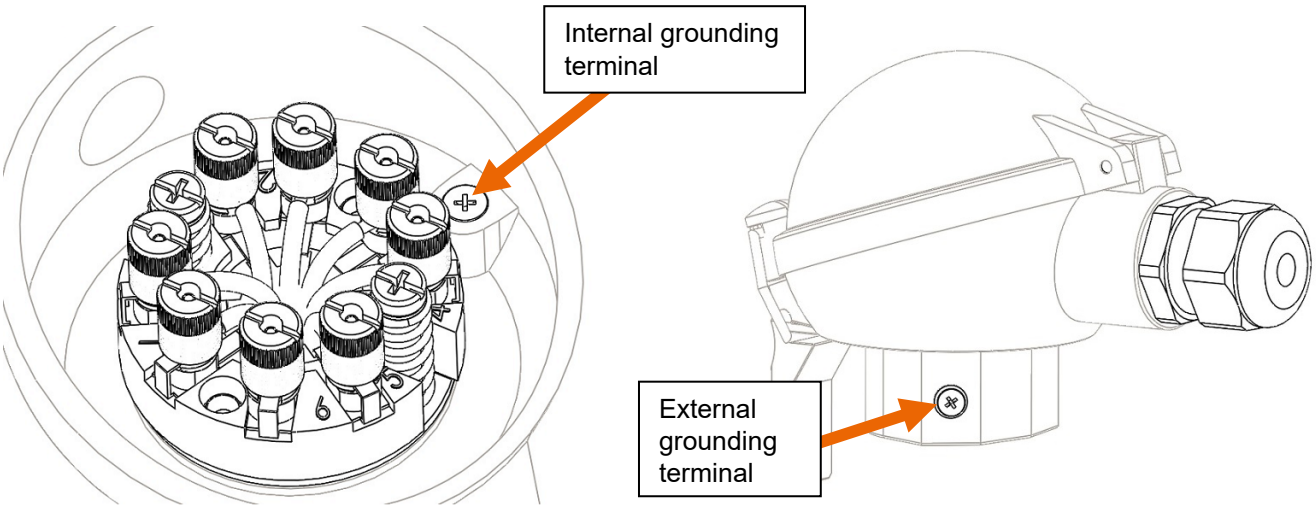

More detailed information for the Ex i type-approved version of the sensor is presented in the appendix to this manual: APPENDIX A – Technical data and special conditions of use - Ex i approved EPIC® SENSORS temperature sensors.

Connection head D/H/D

Connection head type D/H/D is made of aluminum by die-casting method. The connection head is supplied with two cable glands, which are suitable for a maximum diameter of approximately Ø14 mm. The cable entry threads are 2x M20x1.5 and SKINTOP® cable glands can be used to achieve improved protection rating. Any M20x1.5 threaded cable glands can be used with the connection head. Picture below is an example of the D/H/D connection head with a standard cable glands on the left and SKINTOP® cable glands on the right:

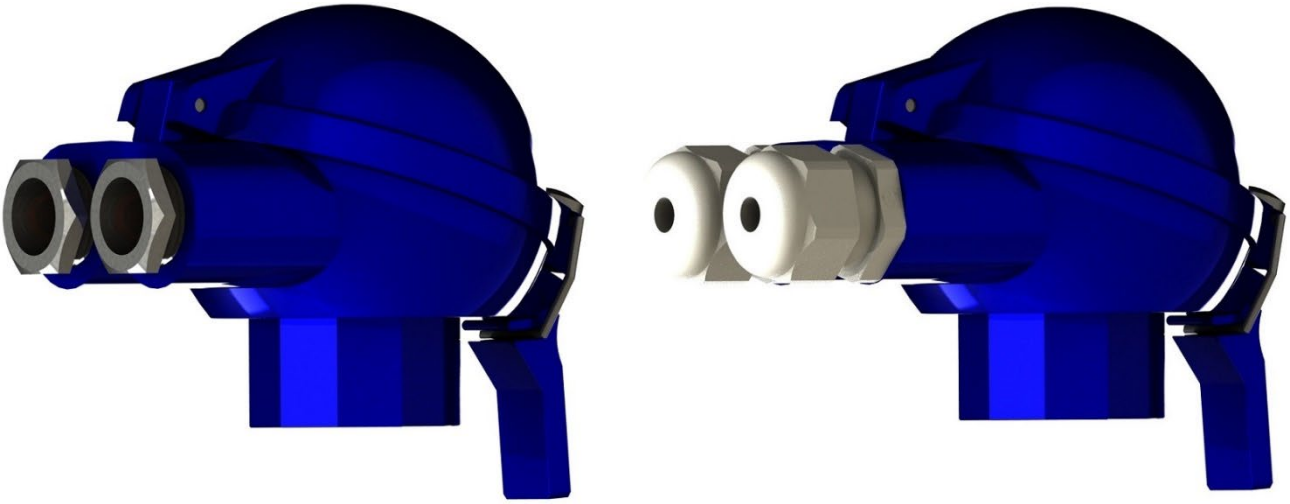

Grounding

D/H/D connection head has threadless blank for fixing the ground. Blank is located inside the connection head, on the side of the interior. The cable ground conductor and/or cable shield braid can be connected to the blank, for example using a cable connector, after the thread has been added to the blank. Thread can be added by using common thread tools. The depth of the well in the blank is 1 cm. The recommended thread to be added is M5.

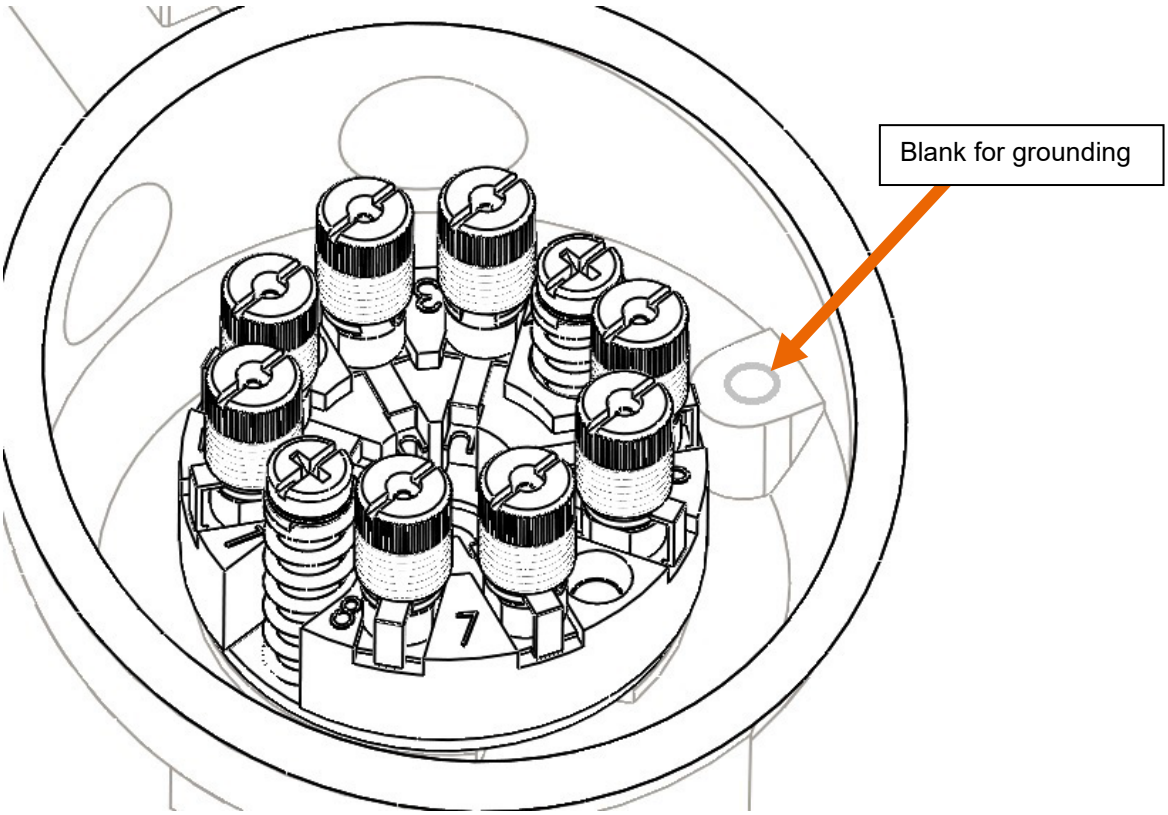

Opening and closing the lid

Note: The connection head contains live parts, make sure that it is possible to open the connection head.

Lid of the connection head is opened by turning the quick-release lever. The quick-release lever is located on the opposing side to the cable gland. By turning the quick release, the lid of the connection head is realeased and it will open to the direction of the hinge, over the cable gland. Closing the lid is accomplished by repeating the opening movement in reverse direction. The following picture below shows the location of the quick release and the direction in which the lever should be turned to open the connection head:

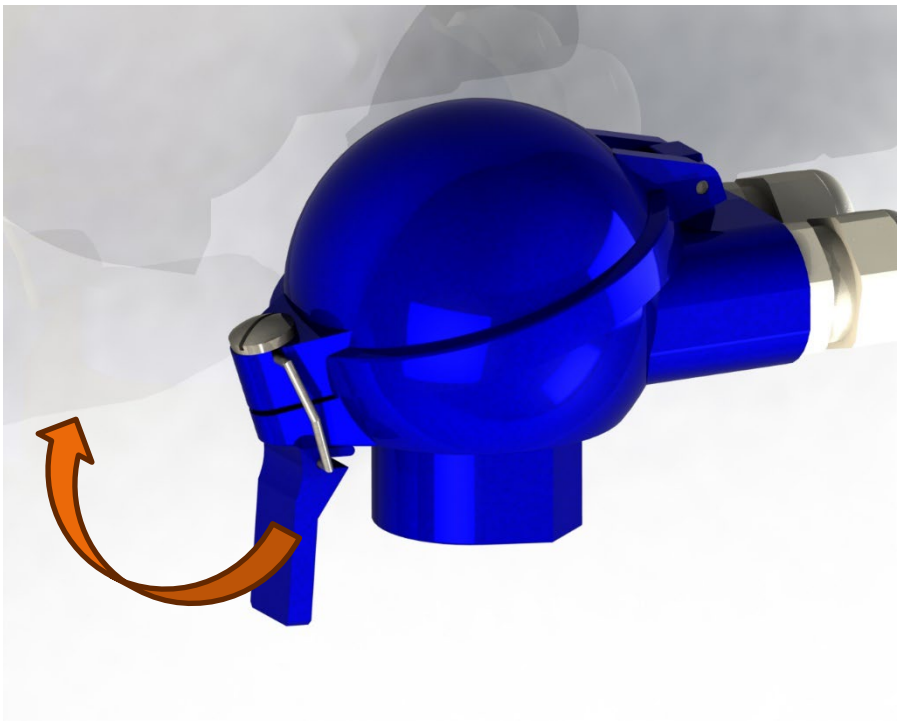

There is a sealing gasket on the bottom side of the lid. Inspect the condition of the gasket when opening the unit. The sealing gasket is Ø74x4 mm, silicone O-ring, with a temperature range of: -40 ... +150 °C. Picture below will show the sealing gasket on the lid in correct position:

Dimensional drawing D/H/D

The space for a temperature transmitter mounted inside the D/H/D connection head is Ø45x40 mm. The dimensions are shown below:

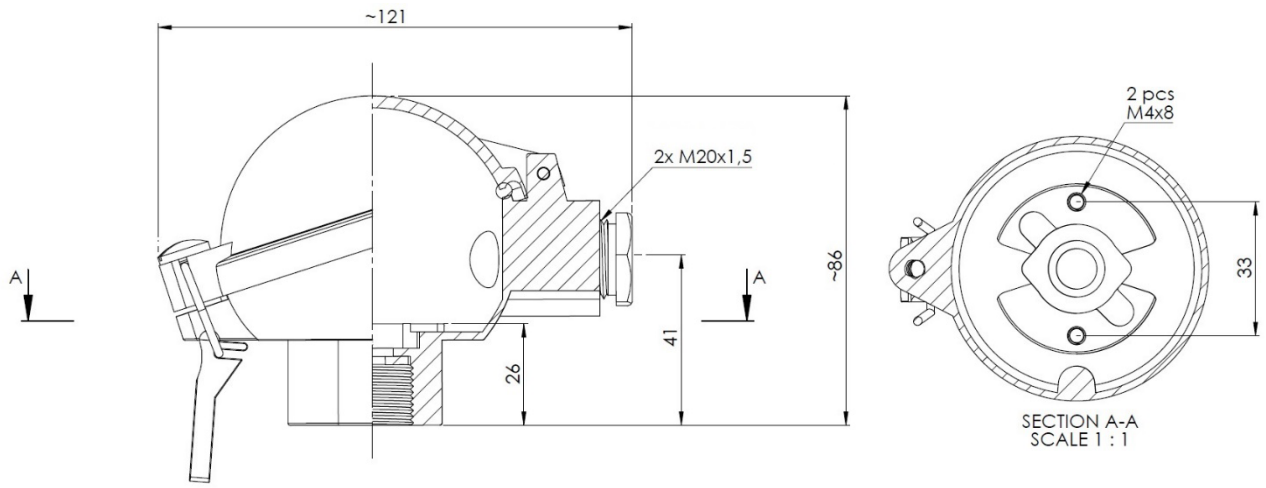

Cable entry threads

The cable entry threads in the type D/H/D connection head is 2x M20x1.5. The cable entry threads can also be customized to G½ or NPT½ threads depending on the case. Availability of the custom threads, other than 2x M20x1.5, must always be separately discussed with our sensor sales. It is also good to note that the cable glands suitable for the custom threads is not necessarily supplied with the connection head.

Ex i approved version

The Ex i approved product version is suitable for use in potentially explosive areas where the use of intrinsically safe Ex i circuits as a protection method is sufficient. These potentially explosive areas may contain flammable gases, vapors, combustible dust or flying particles. Similar facilities are common in the oil and gas, chemical, food and beverage, and pharmaceutical industries.

The Ex i approved product version meets the requirements of the intrinsically safe protection method and can be used in intrinsically safe Ex i circuits.

The Ex i approved product version with D/H/D connection head includes two blue Ex i approved cable glands. The cable glands are suitable for Ø7 – Ø13 mm cables and they will also work as a strain reliefs. The cable entry threads in the Ex i approved version of the D/H/D connection head are 2x M20x1.5. The following picture will show the D/H/D connection head with the two blue Ex i cable glands:

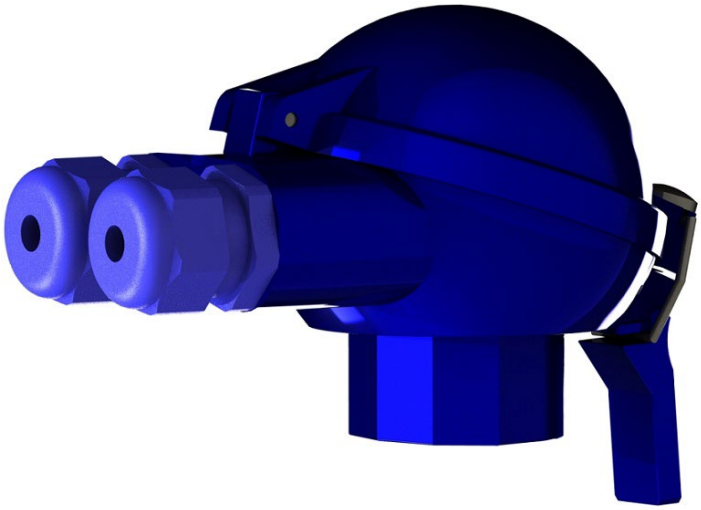

Note: The cable glands of an Ex i approved product must never be replaced with a non-Ex i approved cable glands.

Ex i approved product is supplied with a dimensional drawing, which will confirm that the product design, structure and used components displayed in the drawing will meet the requirements of the standard. The design of the product according to the dimensional drawing may not be changed. In some cases, the dimensional drawing may contain guiding princibles for the correct use of the product, and thus should never be ignored.

Ex i approved product can always be identified by the product name, since the product name has a suffix -EXI. The product name is shown on the sensor nameplate. There is also information about the applicable room classifications in the nameplate. Nameplate can typically be found on the side of the connection head. The picture below is an example of the nameplate of an Ex i approved sensor with a D/H/D connection head. Nameplate example is in accordance with ATEX and IECEx certificates:

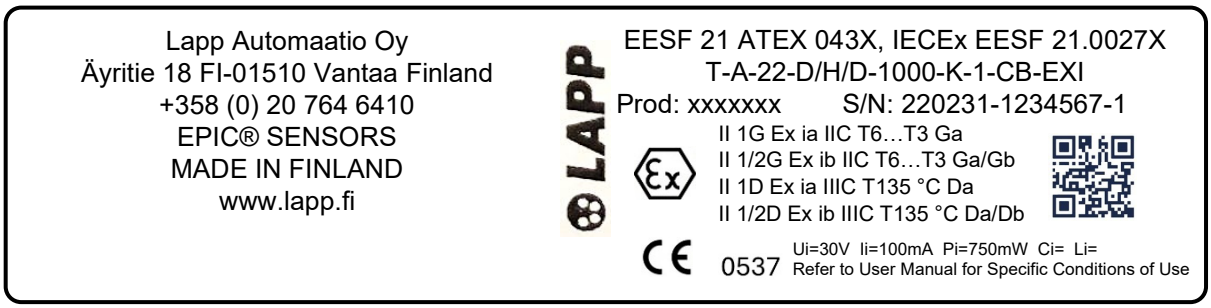

The Ex i approved D/H/D connection head has two grounding terminals, both with fitting screws included. One grounding terminal is internal and other one is external. The locations of grounding terminals is shown in the picture below:

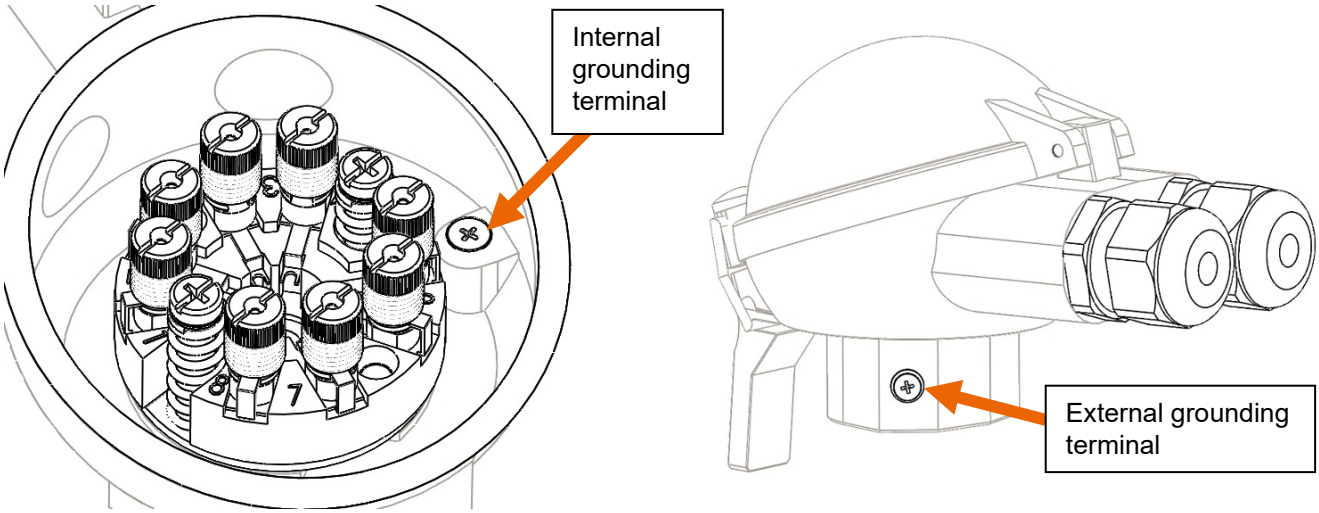

More detailed information for the Ex i type-approved version of the sensor is presented in the appendix to this manual: APPENDIX A – Technical data and special conditions of use - Ex i approved EPIC® SENSORS temperature sensors.

Connection head D/W/H

Connection head type D/W/H is made of aluminum by die-casting method. The connection head is supplied with one cable gland, which is suitable for a maximum diameter of approximately Ø14 mm. The cable entry thread is M20x1.5 and SKINTOP® cable gland can be used to achieve improved protection rating. Any M20x1.5 threaded cable gland can be used with the connection head. Picture below is an example of the D/W/H connection head with a standard cable gland on the left and SKINTOP® cable gland on the right:

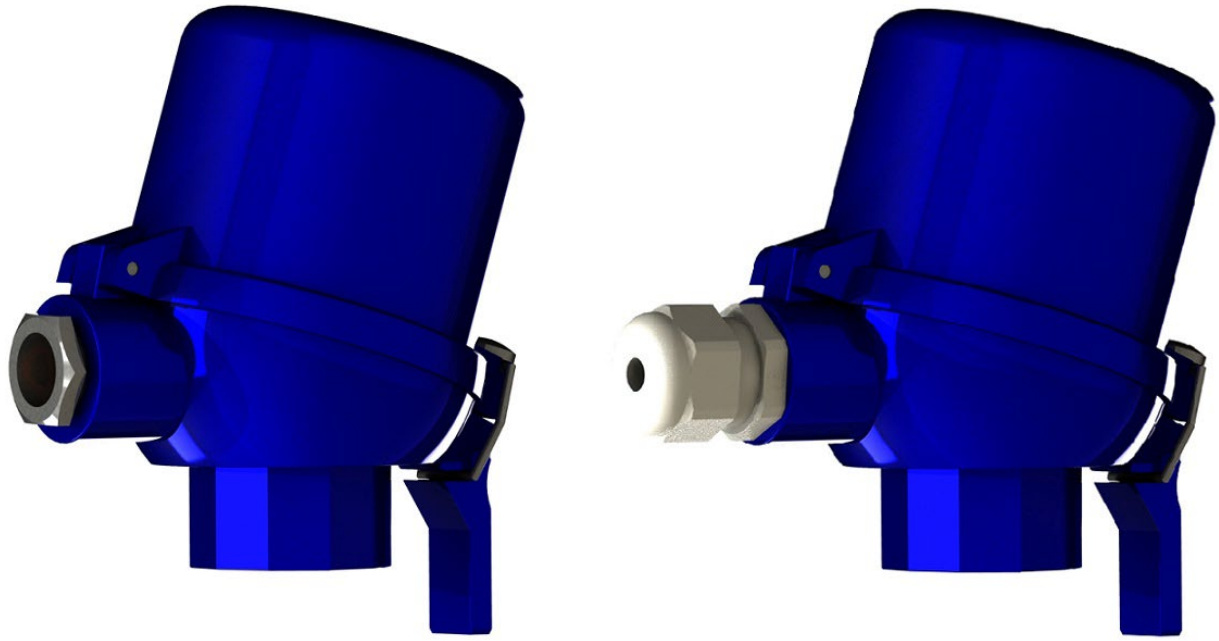

Grounding

D/W/H connection head has threadless blank for fixing the ground. Blank is located inside the connection head, on the side of the interior. The cable ground conductor and/or cable shield braid can be connected to the blank, for example using a cable connector, after the thread has been added to the blank. Thread can be added by using common thread tools. The depth of the well in the blank is 1 cm. The recommended thread to be added is M5.

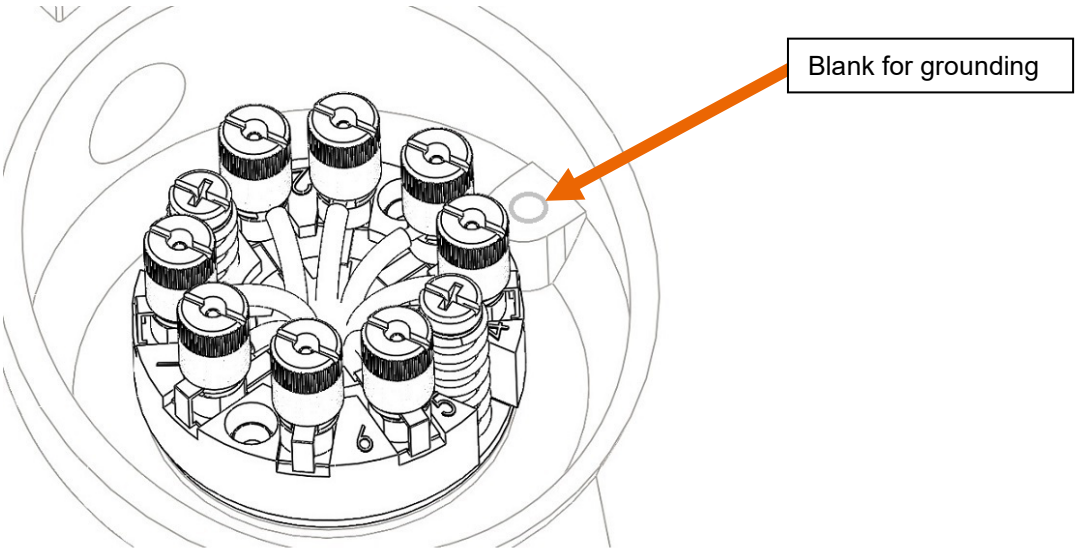

Opening and closing the lid

Note: The connection head contains live parts, make sure that it is possible to open the connection head.

Lid of the connection head is opened by turning the quick-release lever. The quick-release lever is located on the opposing side to the cable gland. By turning the quick release, the lid of the connection head is realeased and it will open to the direction of the hinge, over the cable gland. Closing the lid is accomplished by repeating the opening movement in reverse direction. The following picture below shows the location of the quick release and the direction in which the lever should be turned to open the connection head:

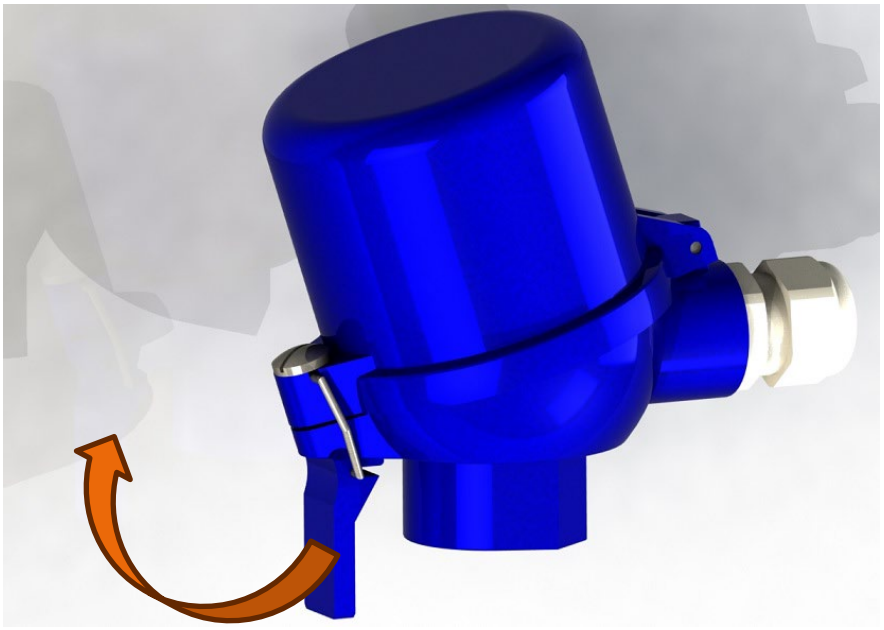

There is a sealing gasket on the bottom side of the lid. Inspect the condition of the gasket when opening the unit. The sealing gasket is Ø74x4 mm, silicone O-ring, with a temperature range of: -40 ... +150 °C. Picture below will show the sealing gasket on the lid in correct position:

Dimensional drawing D/W/H

Two temperature transmitters can be fitted into D/W/H connection head. The available space for temperature transmitters to be mounted are Ø60x40 mm and Ø45x16 mm. The dimensions are shown below:

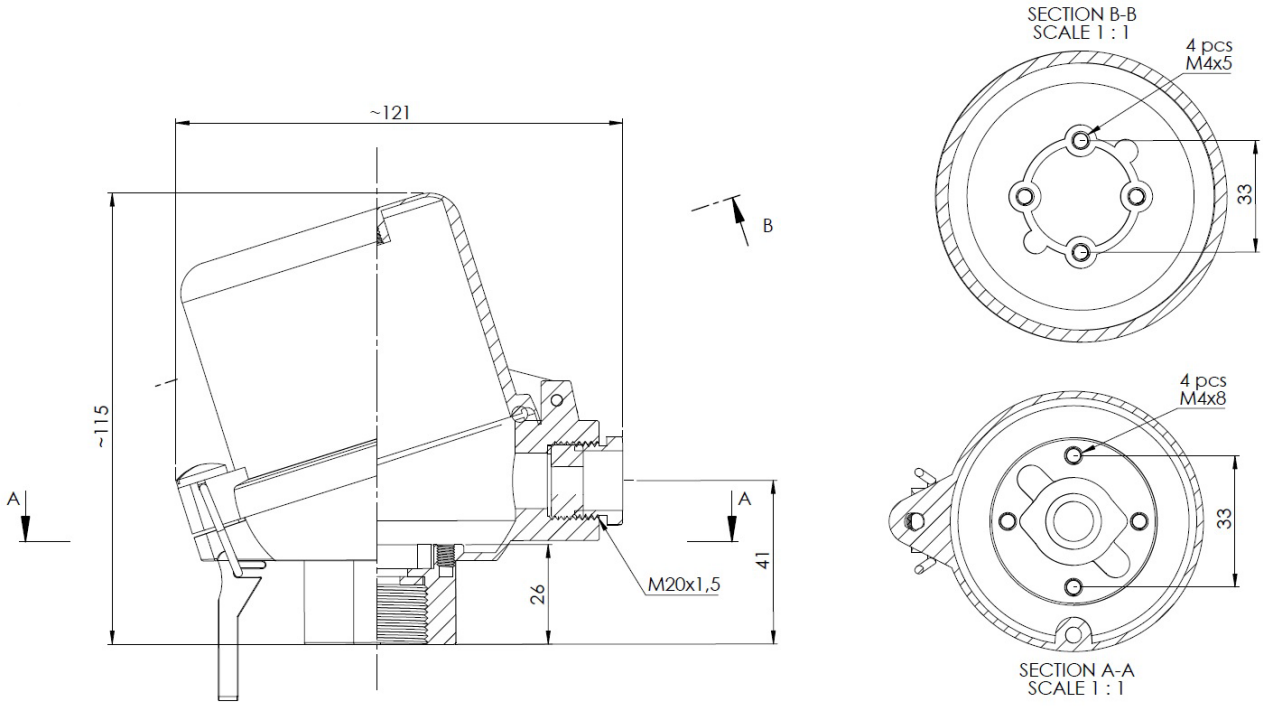

Cable entry thread

The cable entry thread in the type D/W/H connection head is M20x1.5. The cable entry thread can also be customized to G½ or NPT½ depending on the case. Availability of the custom thread, other than M20x1.5, must always be separately discussed with our sensor sales. It is also good to note that the cable gland suitable for the custom thread is not necessarily supplied with the connection head.

Ex i approved version

The Ex i approved product version is suitable for use in potentially explosive areas where the use of intrinsically safe Ex i circuits as a protection method is sufficient. These potentially explosive areas may contain flammable gases, vapors, combustible dust or flying particles. Similar facilities are common in the oil and gas, chemical, food and beverage, and pharmaceutical industries.

The Ex i approved product version meets the requirements of the intrinsically safe protection method and can be used in intrinsically safe Ex i circuits.

The Ex i approved product version with D/W/H connection head includes one blue Ex i approved cable gland. The cable gland is suitable for Ø7 – Ø13 mm cable and it will also work as a strain relief. The cable entry thread in the Ex i approved version of the D/W/H connection head is M20x1.5. The picture shows the D/W/H connection head with the blue Ex i cable gland:

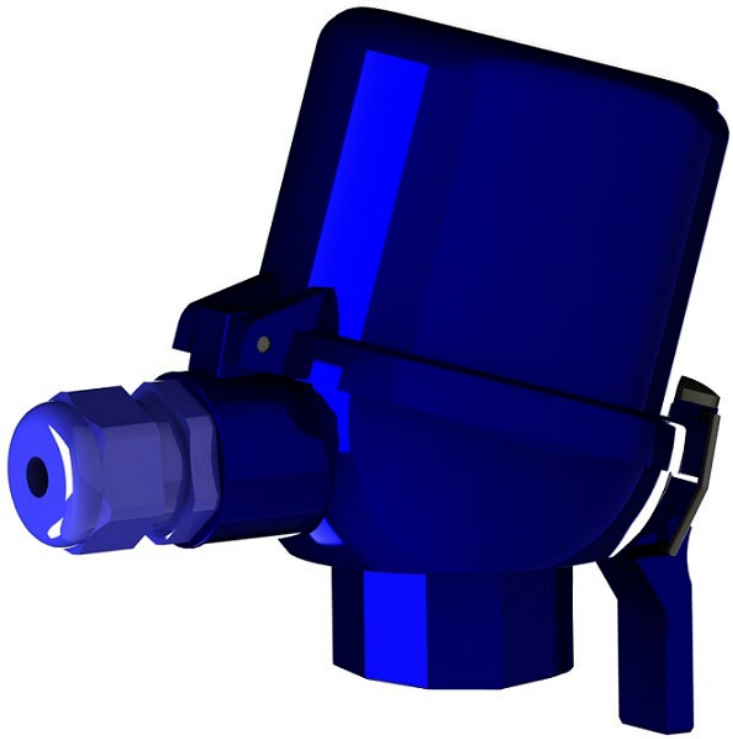

Note: The cable gland of an Ex i approved product must never be replaced with a non-Ex i approved cable gland.

Ex i approved product is supplied with a dimensional drawing, which will confirm that the product design, structure and used components displayed in the drawing will meet the requirements of the standard. The design of the product according to the dimensional drawing may not be changed. In some cases, the dimensional drawing may contain guiding princibles for the correct use of the product, and thus should never be ignored.

Ex i approved product can always be identified by the product name, since the product name has a suffix -EXI. The product name is shown on the sensor nameplate. There is also information about the applicable room classifications in the nameplate.

Nameplate can typically be found on the side of the connection head. The picture below is an example of the nameplate of an Ex i approved sensor with a D/W/H connection head. Nameplate example is in accordance with ATEX and IECEx certificates:

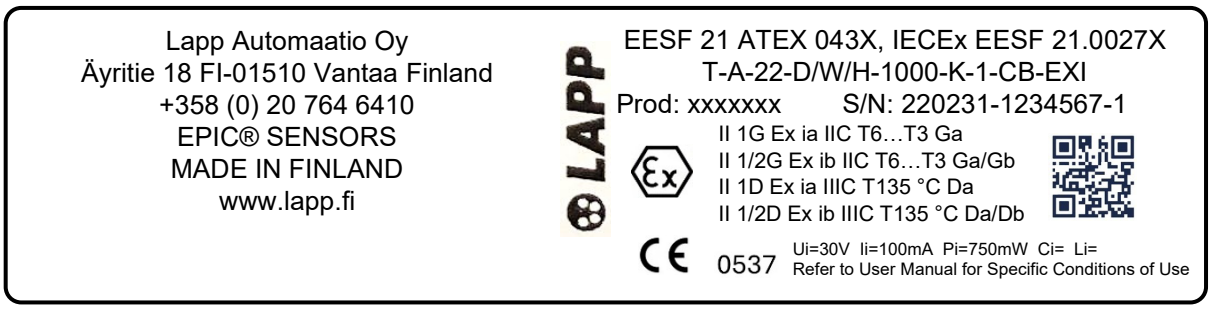

The Ex i approved D/W/H connection head has two grounding terminals, both with fitting screws included. One grounding terminal is internal and other one is external. The locations of grounding terminals is shown in the picture below:

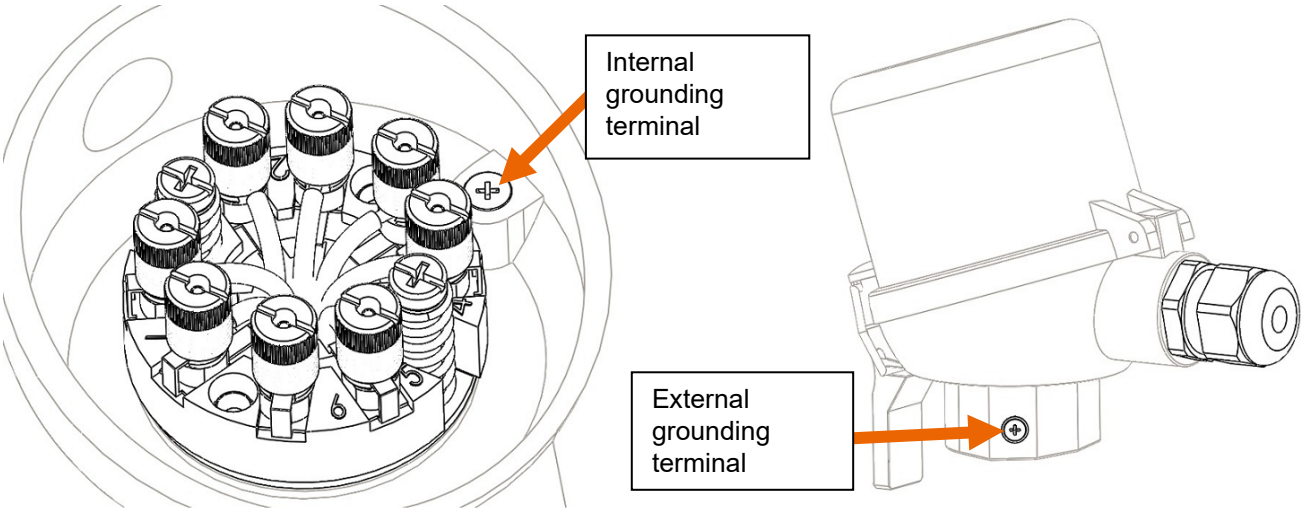

More detailed information for the Ex i type-approved version of the sensor is presented in the appendix to this manual: APPENDIX A – Technical data and special conditions of use - Ex i approved EPIC® SENSORS temperature sensors.

Connection head D/W/H/D

Connection head type D/W/H/D is made of aluminum by die-casting method. The connection head is supplied with two cable glands, which are suitable for a maximum diameter of approximately Ø14 mm. The cable entry thread is M20x1.5 and SKINTOP® cable gland can be used to achieve improved protection rating. Any M20x1.5 threaded cable gland can be used with the connection head. Picture below is an example of the D/W/H/D connection head with a standard cable gland on the left and SKINTOP® cable gland on the right:

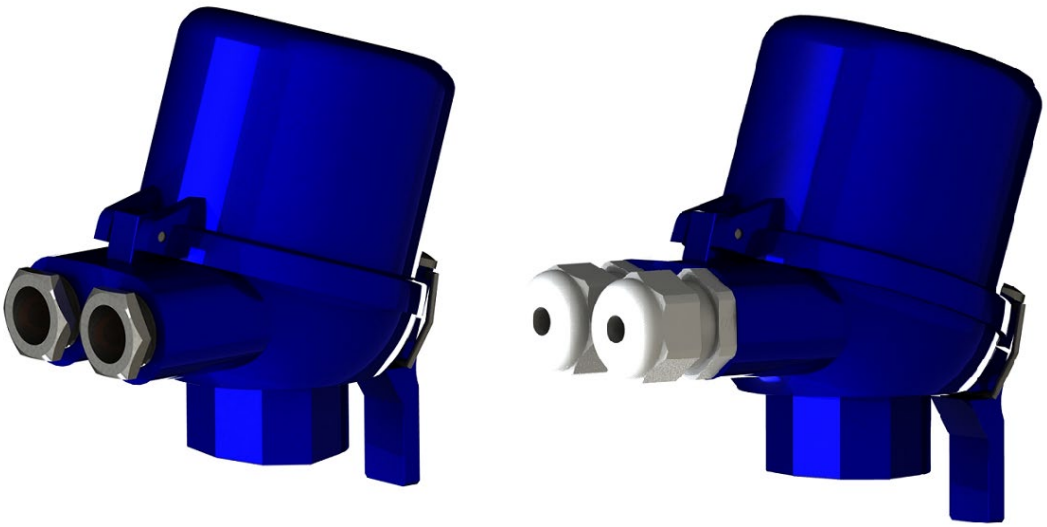

Grounding

D/W/H/D connection head has threadless blank for fixing the ground. Blank is located inside the connection head, on the side of the interior. The cable ground conductor and/or cable shield braid can be connected to the blank, for example using a cable connector, after the thread has been added to the blank. Thread can be added by using common thread tools. The depth of the well in the blank is 1 cm. The recommended thread to be added is M5.

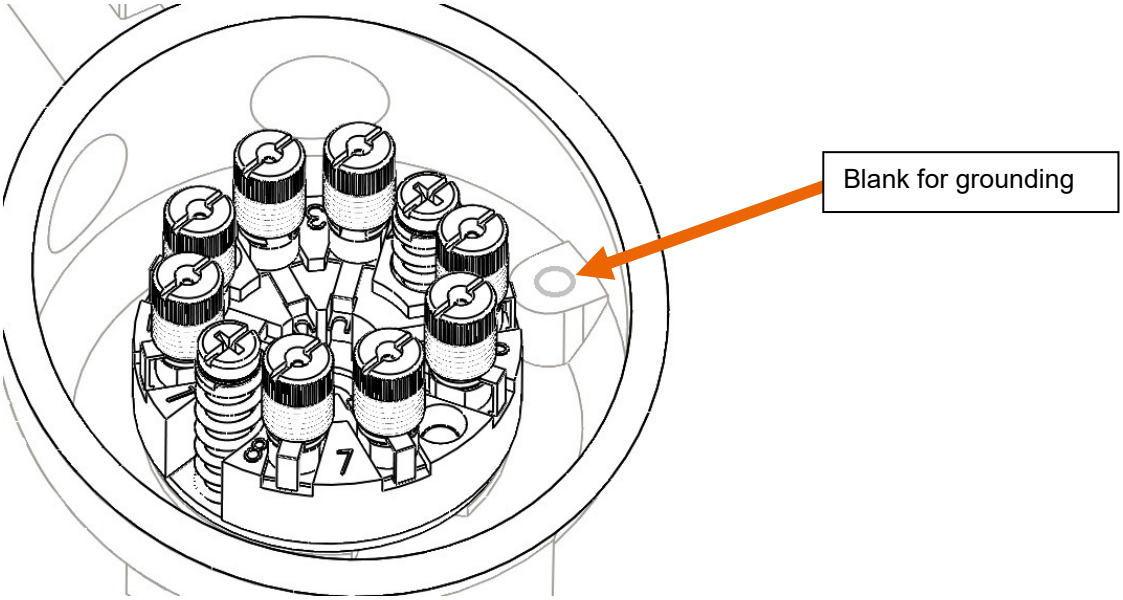

Opening and closing the lid

Note: The connection head contains live parts, make sure that it is possible to open the connection head.

Lid of the connection head is opened by turning the quick-release lever. The quick-release lever is located on the opposing side to the cable gland. By turning the quick release, the lid of the connection head is realeased and it will open to the direction of the hinge, over the cable gland. Closing the lid is accomplished by repeating the opening movement in reverse direction. The following picture below shows the location of the quick release and the direction in which the lever should be turned to open the connection head:

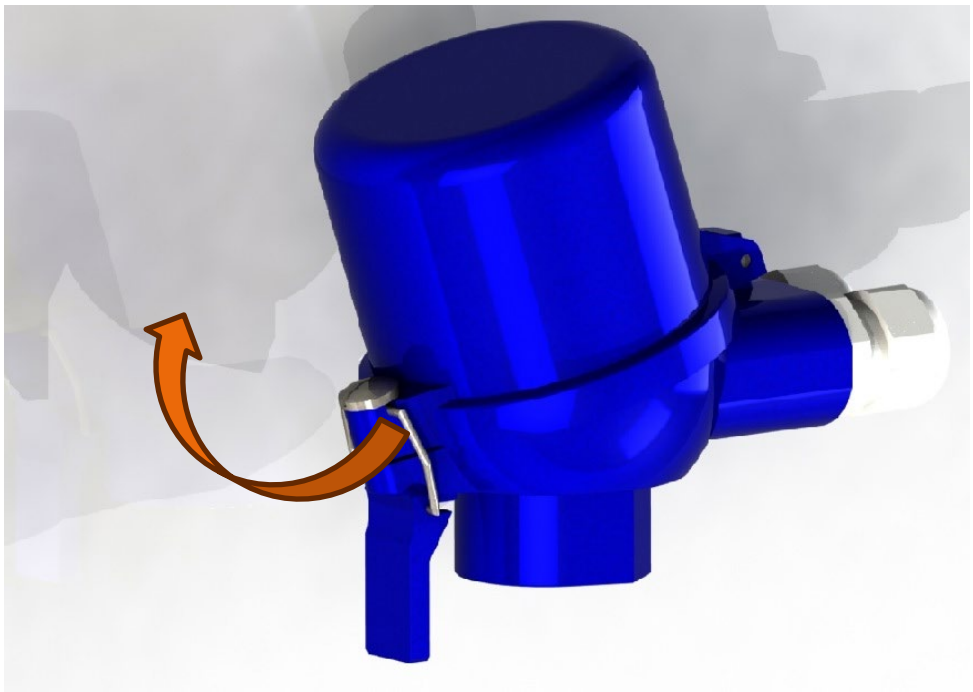

There is a sealing gasket on the bottom side of the lid. Inspect the condition of the gasket when opening the unit. The sealing gasket is Ø74x4 mm, silicone O-ring, with a temperature range of: -40 ... +150 °C. Picture below will show the sealing gasket on the lid in correct position:

Dimensional drawing D/W/H/D

Two temperature transmitters can be fitted into D/W/H/D connection head. The available space for temperature transmitters to be mounted are Ø60x40 mm and Ø45x16 mm. The dimensions are shown below:

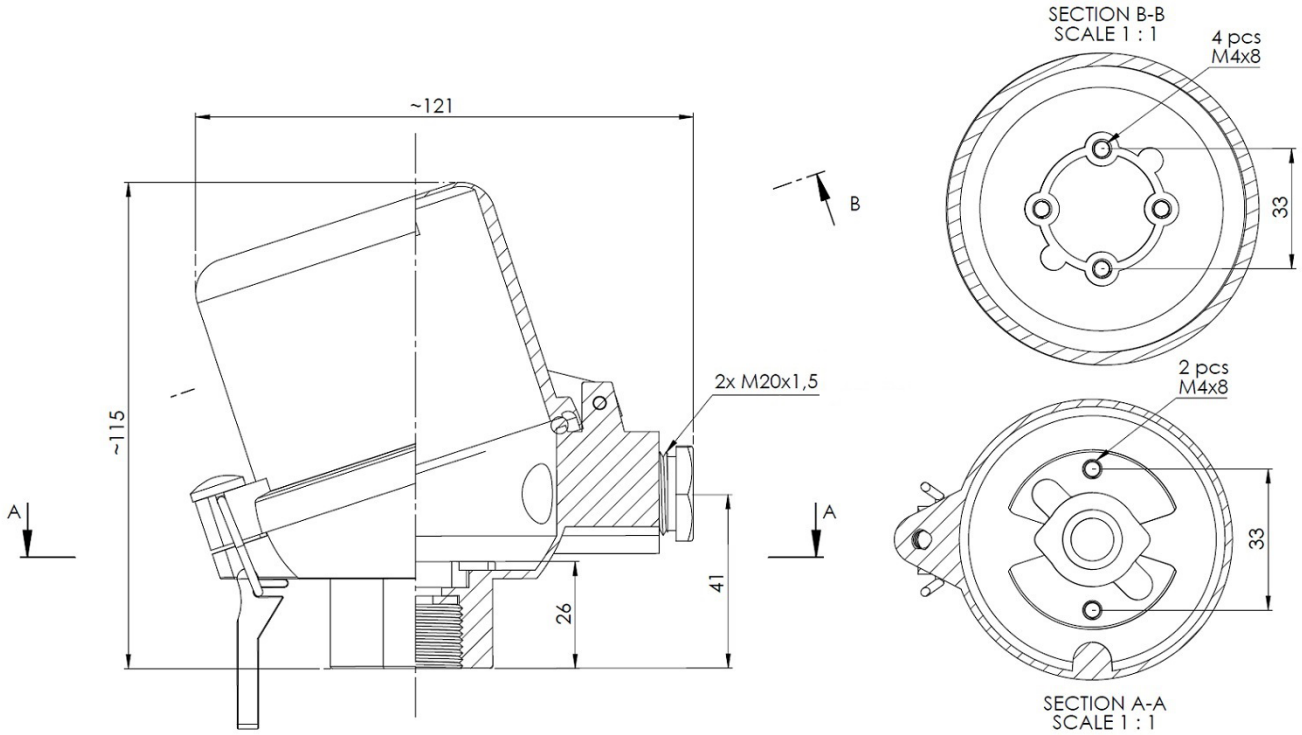

Cable entry thread

The cable entry threads in the type D/W/H/D connection head is 2x M20x1.5. The cable entry threads can also be customized to G½ or NPT½ threads depending on the case. Availability of the custom threads, other than 2x M20x1.5, must always be separately discussed with our sensor sales. It is also good to note that the cable glands suitable for the custom threads is not necessarily supplied with the connection head.

Ex i approved version

The Ex i approved product version is suitable for use in potentially explosive areas where the use of intrinsically safe Ex i circuits as a protection method is sufficient. These potentially explosive areas may contain flammable gases, vapors, combustible dust or flying particles. Similar facilities are common in the oil and gas, chemical, food and beverage, and pharmaceutical industries.

The Ex i approved product version meets the requirements of the intrinsically safe protection method and can be used in intrinsically safe Ex i circuits.

The Ex i approved product version with D/W/H/D connection head includes two blue Ex i approved cable glands. The cable glands are suitable for Ø7 – Ø13 mm cables and they will also work as a strain reliefs. The cable entry threads in the Ex i approved version of the D/W/H/D connection head are 2x M20x1.5. The following picture will show the D/W/H/D connection head with the two blue Ex i cable glands:

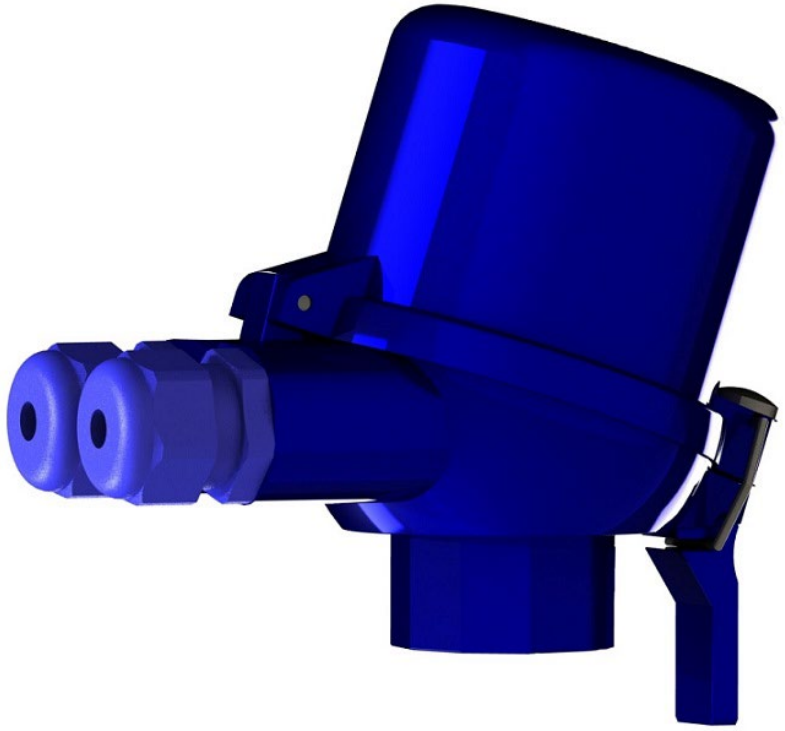

Note: The cable gland of an Ex i approved product must never be replaced with a non-Ex i approved cable gland.

Ex i approved product is supplied with a dimensional drawing, which will confirm that the product design, structure and used components displayed in the drawing will meet the requirements of the standard. The design of the product according to the dimensional drawing may not be changed. In some cases, the dimensional drawing may contain guiding princibles for the correct use of the product, and thus should never be ignored.

Ex i approved product can always be identified by the product name, since the product name has a suffix -EXI. The product name is shown on the sensor nameplate. There is also information about the applicable room classifications in the nameplate. Nameplate can typically be found on the side of the connection head. The picture below is an example of the nameplate of an Ex i approved sensor with a D/W/H/D connection head. Nameplate example is in accordance with ATEX and IECEx certificates:

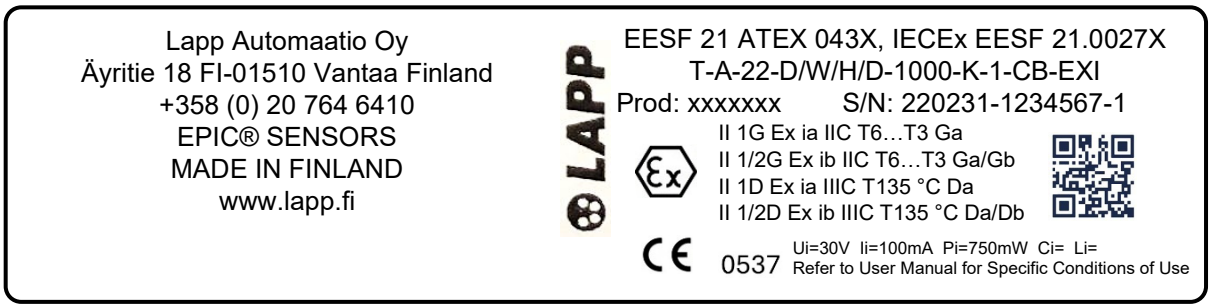

The Ex i approved D/W/H/D connection head has two grounding terminals, both with fitting screws included. One grounding terminal is internal and other one is external. The locations of grounding terminals is shown in the picture below:

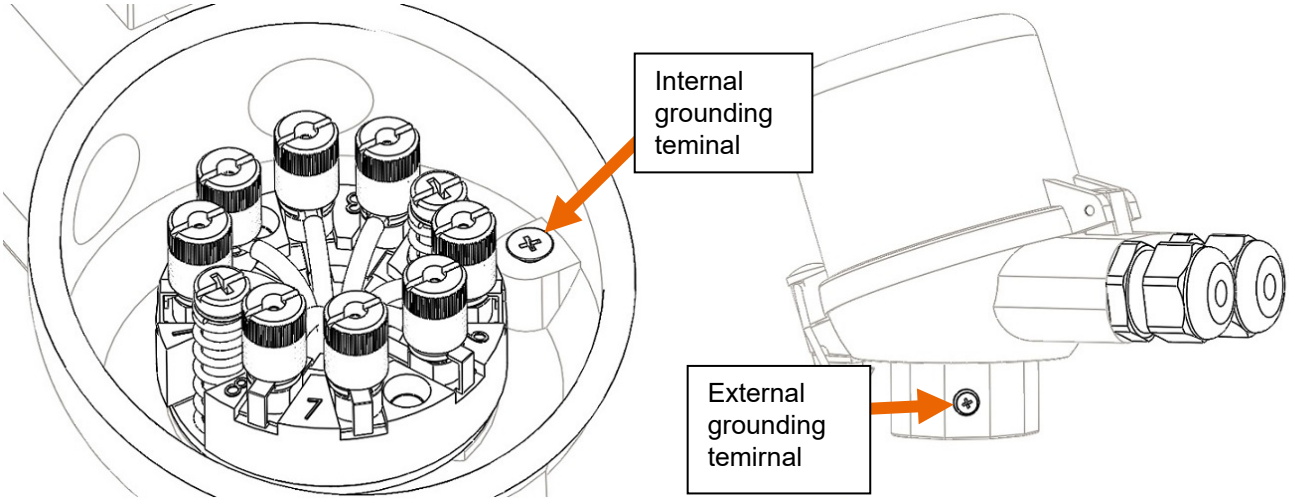

More detailed information for the Ex i type-approved version of the sensor is presented in the appendix to this manual: APPENDIX A – Technical data and special conditions of use - Ex i approved EPIC® SENSORS temperature sensors.

Connection head EXD

EXD connection head will meet the requirements of ATEX and IECEx directives and it can be used in sensors with Ex d or Ex i requirements.

Standard EXD connection head is made of aluminum by die-casting method, but also stanless steel version is available. Only difference between these two versions is the material. Material in EXD connection head is aluminum, unless otherwise agreed with our sensor sales team.

EXD connection head, and sensor mounted with it, does not typically include any cable gland. Reason being that the cable diameter will define the gland to be used and multiple choises are available. Always agree with our sensor sales team if you wish to have gable gland included in EXD connection head.

The cable entry thread is M20x1.5 and any M20x1.5 threaded cable gland can be used with the connection head. Always use Ex approved cable gland according to the Ex room classification. The cable entry thread M20x1,5 can be changed by using a separate coupler, a type of adapter. Always use couplers and fittings that will meet the ATEX and IECEx requirements. Supplier of these parts should always be able to show the required certificates.

Picture below will show EXD connection head with no cable gland on the left, and on the right there is ATEX and IECEx compatible cable gland with a coupler. EXD connection head has only one open slot for the cable gland, other barrel is sealed solid with a wall.

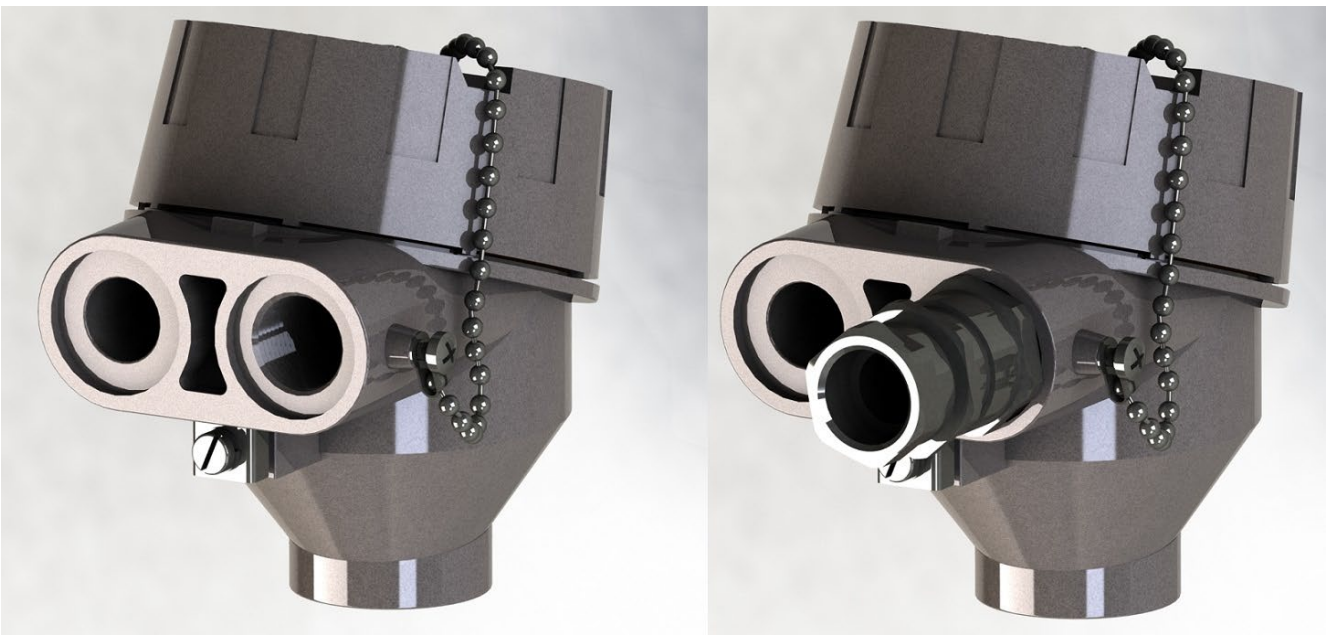

Grounding

EXD connection head has two grounding terminals, both with fitting parts included. One grounding terminal is internal and other one is external. The locations of grounding terminals is shown in the picture below

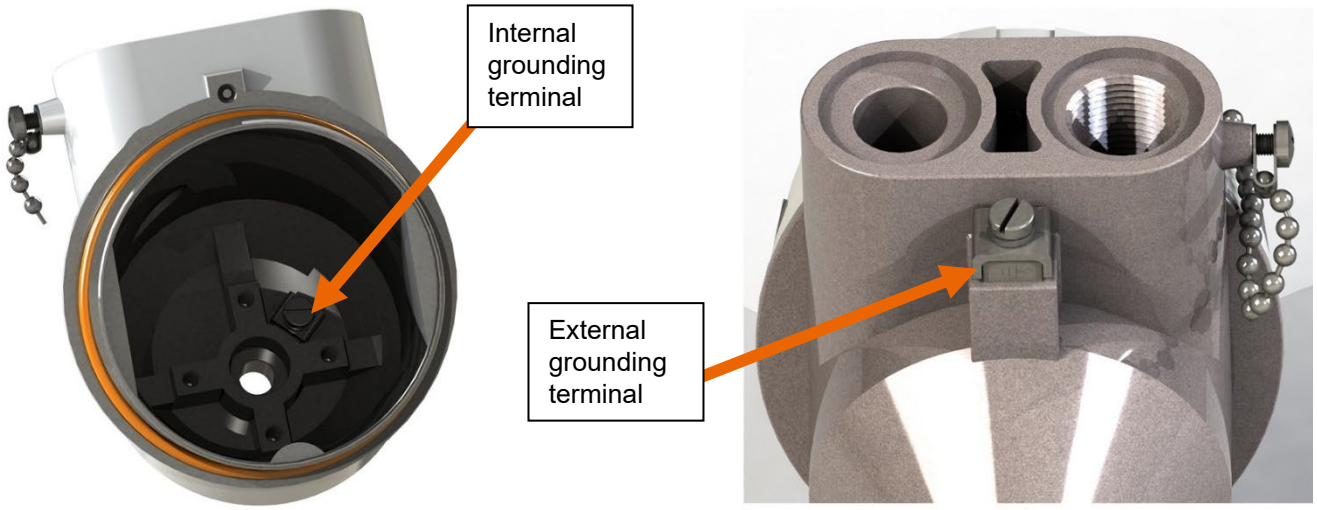

Opening and closing the lid

Note: The connection head contains live parts, make sure that it is possible to open the connection head.

EXD connection head can be locked with a lock pin. Lock pin can be opened and closed with a hex key that has 2 mm distance from flat to flat. Picture below will show the location of the lock pin:

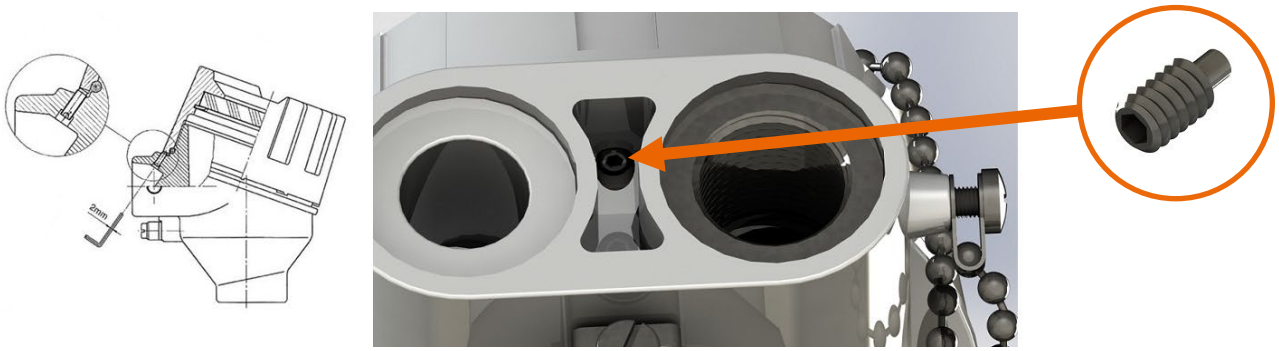

Steps to open the lid:

1) Losen the lock pin by rotating it. This will require 4 full turns to counterclockwise.

   Note: It is possible to remove the lock pin completely. Lock pin will fall at 10 full turns. Avoid removing the lock pin completely if possible.

2) After the lock pin is lose, rotate the lid to open it. Opening the lid will require 12 full turns to counterclockwise.

Steps to close the lid:

1) See that the lock pin is in „open“ position.

   Note: Lock pin in wrong position can prevent the lid from closing properly. In the last tightening turns, the lock pin will get on the way of the lid, if not in „open“ position.

2) Inspect the condition of the sealing gasket of the EXD connection head.

   Note: broken gasket will not meet Ex requirements and should be changed.

3) Inspect the thread of the lid and the thread of the connection head. Both threads need to be clean and unbroken. Any flakes or dirt in the threads during the closing procedure can compromise the protection rating of the connection head.

   Note: broken thread does not meet Ex requirements.

4) Close the lid by rotating it into the thread of the connection head. This will require 12 full turns clockwise.

5) Tighten the lid properly. It is normal that the lid gasket is partly visible at the bottom edge of the lid after tightening. No excessive amounts of force is required to tighten the lid.

6) Lock the lid with lock pin, by rotating lock pin clockwise. Upper edge of the lock pin should meet with the lid. No excessive amounts of force is required to tighten the lock pin.

7) Externally inspect the sensor unit and see that the sealing gasket has set properly.

Sealing gasket is located at the bottom of the thread. Inspect the condition of the gasket when opening the unit. The sealing gasket is Ø80x3 mm, silicone O-ring, with a temperature range of: -50 ... +150 °C. Picture below will show the sealing gasket on the lid in correct position:

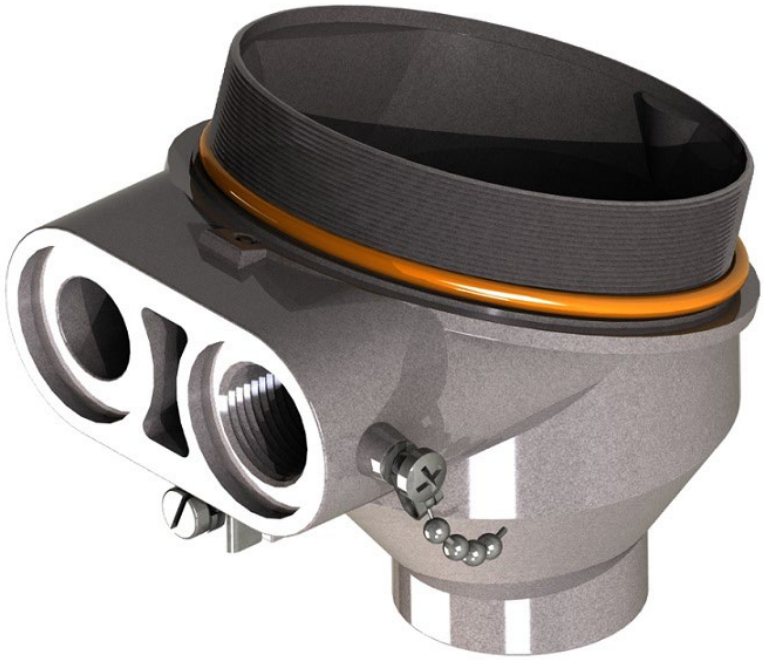

Dimensional drawing EXD

The available space for temperature transmitter to be mounted in EXD connection head is Ø55x50 mm. The dimensions are shown below:

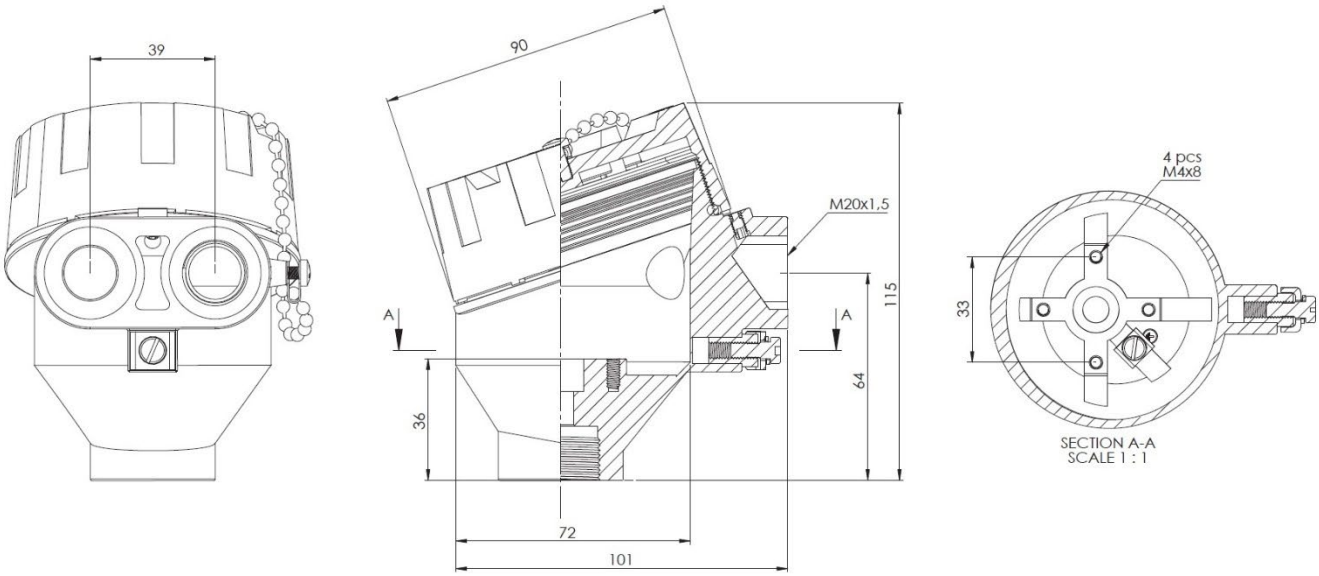

Ex d and Ex i approved versions

EXD connection head will meet the Ex d requirements of gasses in ATEX zones 1 and 2, also for dusts in zones 21 and 22. The Ex i approved version of EXD connection head is suitable for use in potentially explosive areas where the use of intrinsically safe Ex i circuits as a protection method is sufficient. EXD connection head is available with both Ex d and Ex i certificates.

Cable gland is not supplied with the EXD connection head. Cable gland must be separately specified and ordered with our sensor sales team. Cable gland must be selected according to the cable diameter and ATEX or IECEx compatible cable gland should be used.

Product is supplied with a dimensional drawing, which will confirm that the product design, structure and used components displayed in the drawing will meet the requirements of the standards. The design of the product according to the dimensional drawing may not be changed. In some cases, the dimensional drawing may contain guiding princibles for the correct use of the product, and thus should never be ignored.

Ex i approved product can always be identified by the product name, since the product name has a suffix -EXI. The product name is shown on the sensor nameplate. There is also information about the applicable room classifications in the nameplate. Nameplate can typically be found on the side of the connection head. The picture below is an example of the nameplate of an Ex i approved sensor with EXD connection head. Nameplate example is in accordance with ATEX and IECEx certificates:

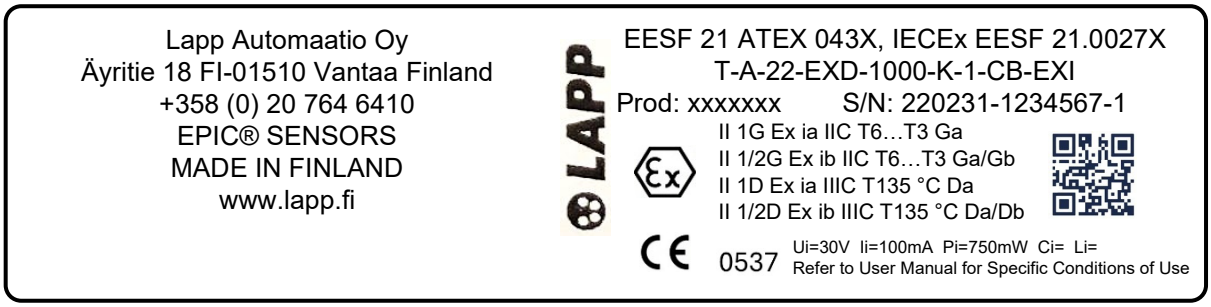

Picture below will show nameplate of Ex d certified sensor with EXD connection head:

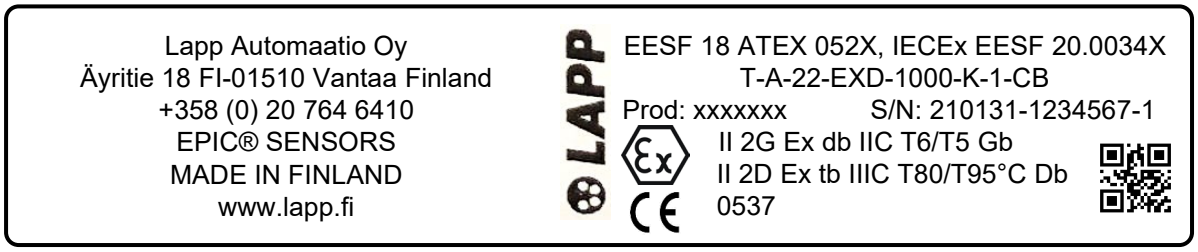

More detailed information for the Ex i type-approved version of the sensor is presented in the appendix to this manual: APPENDIX A – Technical data and special conditions of use - Ex i approved EPIC® SENSORS temperature sensors.

Lid gasket

Connection head is sealed with a sealing gasket made of silicone or rubber. If there is any visual damage, abrasion or wear in the sealing gasket, it should be changed. Sensor unit with broken sealing does not have the protection rating equivalent of new sensor. Table below will show sealing gaskets according to the connection head:

Connection head	Sealing gasket
HST	O-ring, Silicone gasket, Ø50x2 mm, –40 … +150 °C
B	Oil resistant rubber gasket, –40 … +100 °C
N	O-ring, Silicone gasket, Ø60x4 mm, –40 … +150 °C
D/H	O-ring, Silicone gasket, Ø72x4 mm, –40 … +150 °C
D/H/D	O-ring, Silicone gasket, Ø72x4 mm, –40 … +150 °C
D/W/H	O-ring, Silicone gasket, Ø72x4 mm, –40 … +150 °C
D/W/H/D	O-ring, Silicone gasket, Ø72x4 mm, –40 … +150 °C
EXD	O-ring, Silicone gasket, Ø80x3 mm, –50 … +150 °C

Steps to replace the gasket:

Note: The connection head contains live parts, make sure that it is possible to open the connection head.

1) Open the connection head.

2) Remove old gasket and any residue by using gasket removal tools. Avoid scratching the sealing surfaces at the process.

3) Inspect the cleaniness of the sealing surfaces. Remove any oils, dirt or other residue from the surfaces.

4) Add new gasket according to the specifications.

5) Close the connection head.

6) Inspect that the sealing gasket has set correctly after the connection head has been closed.

Measuring element

Sensor contains internal measuring element that can be changed. Measuring element contains one or more measuring points, that can be thermocouple or resistance based Pt100 type. Measuring elements used in EXD connection head have their own dimensions and they can not be used in other connection heads. Ex i certified sensors have the same internal measuring element dimensions, as normal „non-Ex d certified“ sensors. Based on this information internal measuring elements are divided to Ex d compatible EXD type and normal type. Measuring element of Ex d certified sensor should never be changed to normal measuring element. In some cases this could lead to sensors not compatible with the required Ex requirements. Measuring element compatible to Ex d certificate and EXD connection head, can be recognized from product name with suffix /EXD. Normal measuring element does not have this suffix. Product name can be read from the type plate, which is located at the bottom side of the disk. Picture below will show the difference in the structure of these two different measuring elements:

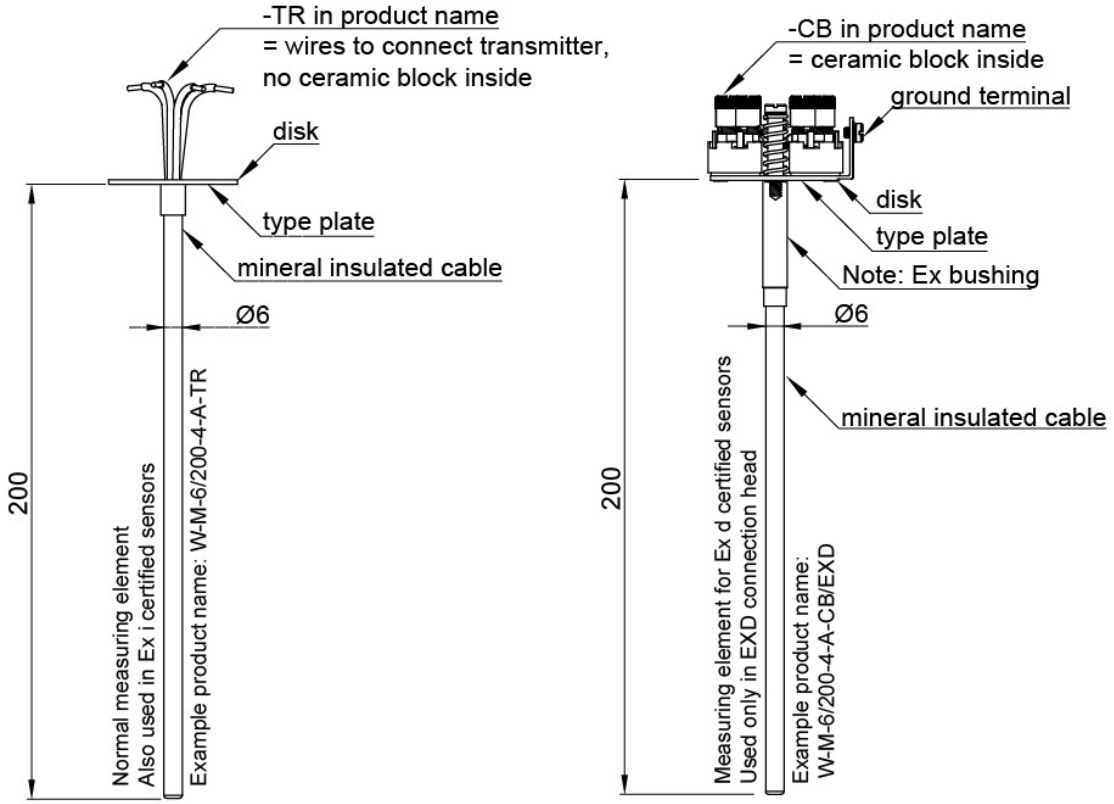

Measuring element can be with wires to connect transmitter to it, or it can be with ceramic block to connect extension cable to it. Measuring element with wires for transmitter connection has name with suffix -TR, and similarly, it has name suffix -CB when measuring element is with ceramic block. Both options are available for Ex d certified sensor with EXD type of measuring element, and both versions are also available for normal type of measuring elements.

Measuring elements are also available with reinforced tip. This can be seen as wider tip that is typically 40 mm in length and 8 mm in diameter. Reinforced tip decreases the changes for the tip to move in the thermowell, thus decreasing changes for virbration to cause any damage to the measuring element. Reinforced tip is mostly used in aplications with moving liquids. Measuring element with reinforced tip can be identified from the fact that there is „SV“ as part of the product name. Internal dimension of the thermowell must be considered when choosing the measuring element with reinforced tip. Picture below will show the sturcture of measuring elements with reinforced tip:

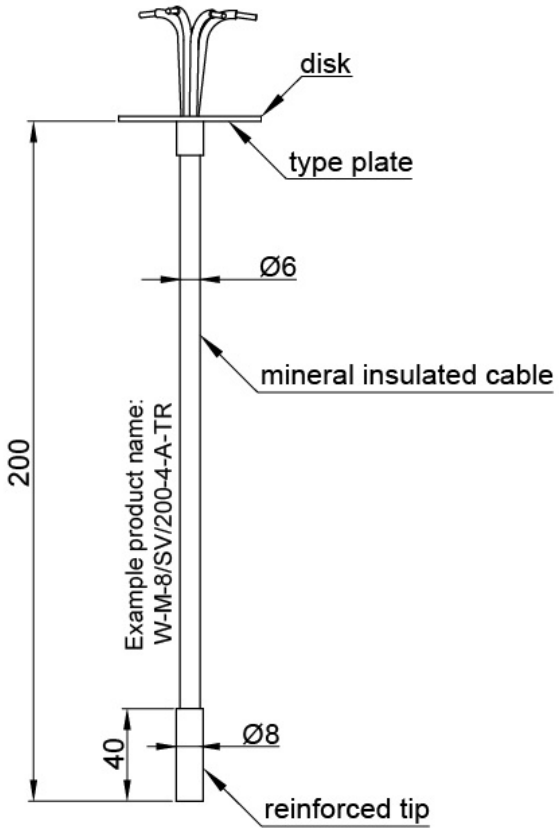

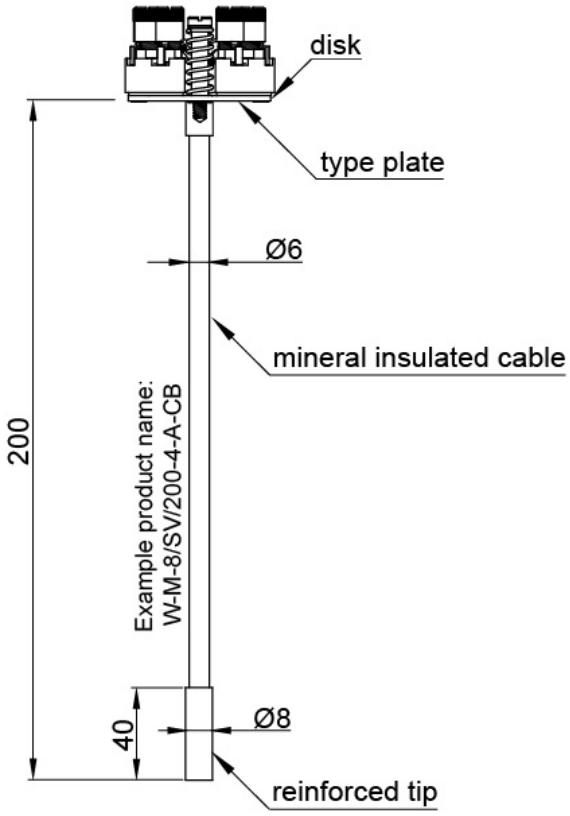

Code key

Product name of the measuring element is formed according to separate code key. Picture below will show the code key of the measuring element:

W — M — 6 — / 315 — 4 — A — TR / EXD — X

W	= Pt100 resistance thermometer
2xW	= 2 x Pt100 resistance thermometer
T	= thermocouple
2xT	= 2 x thermocouple
M	= mineral insulated sensor (constant in code)
3, 6, 8	= outer diameter of MI cable (ØOD) [mm]
empty	= even thickness (as standard delivery)
SV	= thick wall in measure end
315	= length, L [mm]
4,3,2	= Pt100 wire count
K,N,J	= thermocouple type
A,B	= Pt100 accuracy class, (class A as standard delivery)
1,2,3	= thermocouple accuracy class, (class 1 as standard delivery)
TR	= wires for transmitter connection
CB	= with ceramic terminal block
empty	= normal version for regular and EXI sensor
EXD	= Ex d -version with specific dimensions, used only with EXD enclosure
X	= additional details on the text line

Note: Product name of measuring element for Ex d certified sensor is alway with suffix /EXD.

Length

Length of the measuring element is dimensioned according to the connection head in use, but also other aspects need to be considered; such as the length of the thread coupler under the connection head and the thickness of the thermowell. We do not currently provide inherent information on „how to select the length of the measuring element“ for the sensor. For selecting the length of the measuring element, please contact our sales team.

Inspection

Technical inspection of measuring element with Pt100 resistance temperature sensor can be done with a basic multimeter. Inspection is carried by measuring the resistance of the Pt100. Inspection must be done over the Pt100 and between all wires. This will eliminate the chance of broken wire or other abnormal behaviour. The value of the Pt100 resistance should be 100 Ω in temperature of 0 °C, and 110 Ω in temperature of +25 °C.

To inspect a thermocouple the measuring tip of the thermocouple must be heated. Heating must be accurately controlled while the response, millivolt [mV], value is measured. The measured response value must be then compensated with the reference point response value. The resulting millivolt [mV] value can then be compared with the values in standardized reference tables. If the values are matching, the thermocouple should be in working condition. This technique is called as cold junction compensation.

Most of the temperature measuring applications with thermocouples have an internal Pt100 sensing element to measure the reference point temperature. Temperature transmitters typically have their own reference point temperature measurement, that is used to compensate the measured temperature of the hot point. In thermoucouple temperature measurement the reference temperature is always needed to accurately read the temperature of the hot point.

Picture below will show illustration of the hot measurement point and the location of the cold reference point:

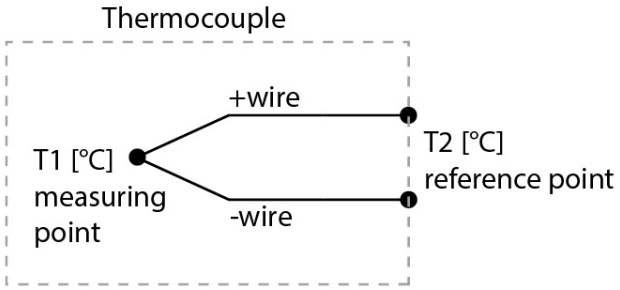

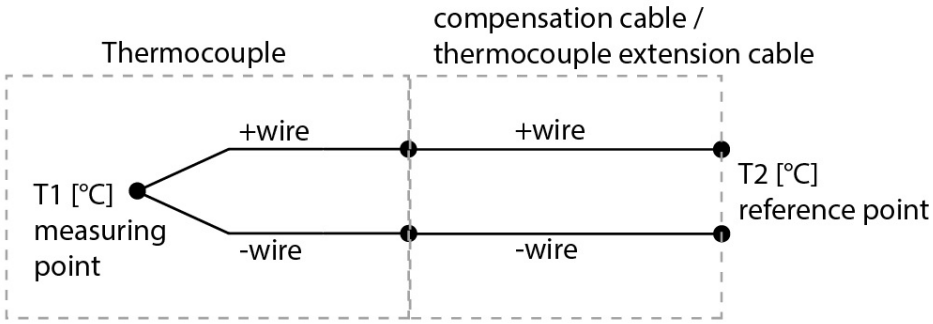

To ease the inspection of thermocouple, it is recommended to keep T2 [°C] temperature as steady as possible. Reference point can be transferred to a location where the termperature is constant by using thermocouple extension cable. When using an extension cable, it is necessary to keep the material as unchanged between the hot point to the reference point. Never cross-connect the wires and always use suitable connectors: i.e. for K-type of thermocouple always use K-type of connectors. If positive wire is connected to the negative wire, the thermocouple will not work as intended, for more reference please see section ”TC: Thermocouple cable color codes”.

Reference table to inspect the thermocouple functionality can be found from standard IEC 60584. After the cold point compensation has been done, the response value of the thermocouple can be compared to the table values. T2 temperature of the reference point, for the table value comparison, should be at 0 [°C].

Calibration

Measuring element of the temperature sensor can be calibrated to customer specified temperature range. To specify the calibration area: two points on a temperature scale are needed. Calibration can also be done by a third party, typically accredited testing laboratory. Calibration should be done as liquid bath calibration, where the sensor tip is dipped to a constant temperature flowing liquid, typically silicone oil. Equipment to perform the calibration should be regularly calibrated for the best results.

Typical calibration intervals are:

- Pt100 resistance sensor: 12-24 months
- Thermocouple sensor: 12 months
- Re-calibration is recommended for sensors that has been stored for over than 3 years.

Calibration interval must be evaluated according to the process and possible risk involved. Always think what is the risk involved when the temperature sensor is going out of calibration. For example, in pharmaceutical industry where medicine is manufactured calibrations must be done on regular basis to minimize this risk. If process requires precision from the temperature, the calibration is then recommended to be done in short intervals.

Measuring element will age in use, and this ageing is not always linear with time. Ageing is faster in cyclic processes where the change in temperature is big in short duration of time. This ageing can be seen in the calibration, since it is possible to compare the calibration results to the initial calibration results of the sensor.

Measurement error and tolerance

Tolerance and measurement error of thermocouples, and any calculus related to them, is presented in standards: IEC 60584, DIN 43710 and ANSI MC96.1. Thermoelement accuracy class is typically 1.

Standard IEC 60751 has information about measurement error of Pt100 resistance sensor. In Pt100 resistance sensor some measurement error is often caused by the small resistance of the wires or cable in use. It is necessary to eliminate this small constant resistance if very accurate temperature reading is needed.

Insulation resistance

Insulation resistance of the measuring elementi is always inspected during the manufacturing. The insulation resistance is measured from the internal measuring loop to the external metal parts of the element. If multiple measuring loops are present, insulation resistance of each loop is measured and deemed to be sufficient. Insulation resistance should be ≥ 500 MΩ in room temperature in operational condition. Insulation resistance can be measured by using insulation resistance tester intended for this use. Always use tester that is calibrated.

Type plate

Each measuring element have their own individual type plate. In general there are two versions of the type plate; type plate for Ex d compatible measuring element and normal type plate. Pictures below will show the type plates:

Type plate of normal and Ex i compatible element:
CE-mark
Product group
Country of production
Contact information
Serial number as QR-code

Product name, i.e. W-M-6/455-4-A-CB
Product number, i.e. 1014978
Serial number, i.e. 260224-1414937-3

Type plate of Ex d compatible element:
Product name, i.e. W-M-6/455-4-A-CB/EXD
Product number, i.e. 1014960
Serial number, i.e. 260310-1408091-9

CE-mark
Product group
Country of production
Contact information
Serial number as QR-code

Replacing the measuring element

Note: The connection head contains live parts, make sure that it is possible to open the connection head.

1) Open the connection head. See section „Connection heads“ for information on how to open.

2) Remove any cable connection from the ceramic block or transmitter.

3) Measuring element is mechanically attached to the connection head with two spring loaded screws. Losen these screws. Picture below will show the screws:

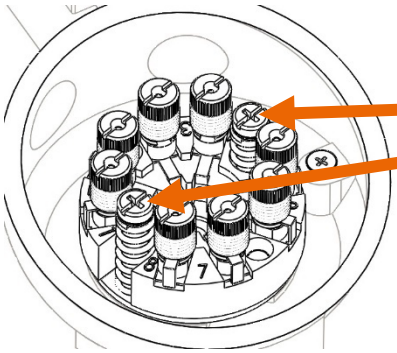

Spring loaded screws

4) Remove the measuring element by pulling it straight upwards. See picture below:

5) See that the product name of the new measuring element is equalt to the old removed measuring element. This can be read from type plate at bottom of the disk. If uncertaintity exists, please contact our sales.

6) Fit the new measuring element to the thermowell, to the same place where the old removed measuring element was being housed.

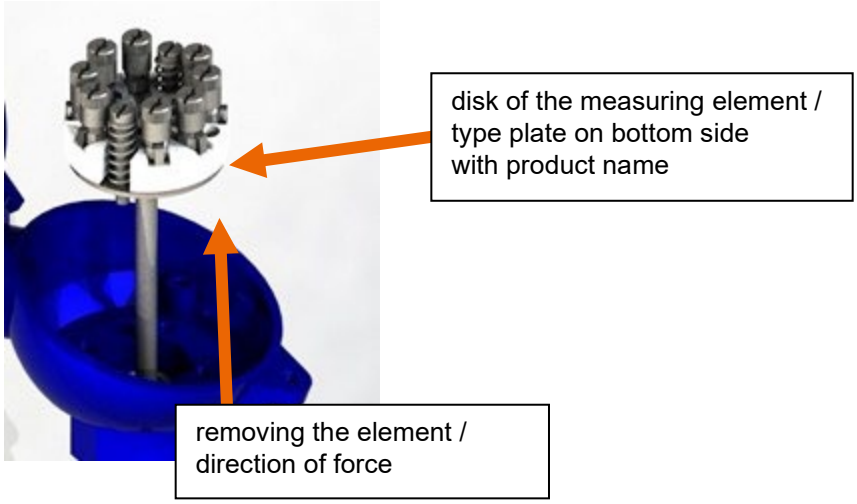

Note: Disk of the measuring element does not need to be in direct contact with the connection head. Spring loaded screws will tolerate 8-10 millimeter gap to the surface of the connection head. In situation where the tip of the measuring element is pressed to the tip of the thermowell, the bottom surface of the disk is typically few millimeters above the internal surface of the connection head.

7) Connect cable back to the measuring element through the cable gland of the connection head.

8) Connect measuring element to the connection head by tightening the spring loaded screws.

9) Close the lid of the connection head.

Adding transmitter to the sensor

Note: The connection head contains live parts, make sure that it is possible to open the connection head.

Note: The measuring element must have -TR in product name, which enables that transmitter can be attached to it.

1) Open the connection head. See section „Connection heads“ for information on how to open.

2) Find the measuring element and bring it up. In new sensor it could be inside the connection head during the transportation.

3) Find the temperature transmitter and remove the two lock washers from the bottom side.

   Note: Do not let screws or springs fall off during this step. Lock washers are needed later, store them in safe place.

4) Connect the tranmistter to the measuring element by bringing the wires of the measuring element through the hole in the center of the transmitter to the top side. Connect lock washers to the bottom side of the measuring element disk, to the same screws they were initially removed from.

Note: Transmitter should now be fixed to the measuring element disk.

5) Insert the measuring element with the transmitter to the thermowell of the sensor

Note: bottom of the measuring element disk does not need to meet with the connection head. There may be gap of few millimeters.

6) Connect the measuring element to the connection head with the spring loaded screws. See picture below:

7) Connect the wires of the measuring element to the transmitter in use. See correct connection and pin order from the datasheet of the transmitter in use. Most of the transmitter datasheets can be found online.

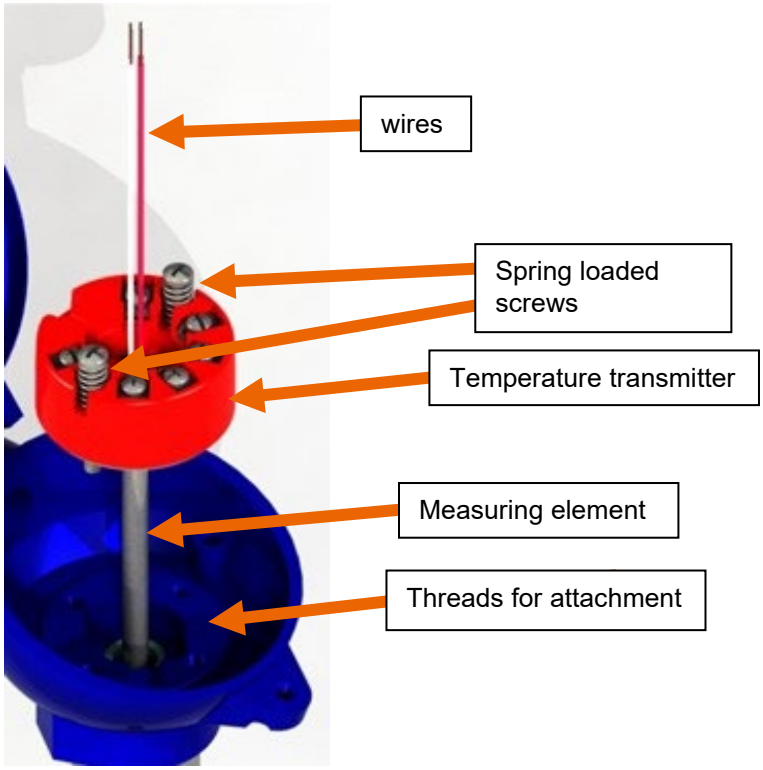

Connecting cable to the sensor

Note: The connection head contains live parts, make sure that it is possible to open the connection head.

Note: It is recommended to use SKINTOP® cable glands to achieve improved protection rating of the sensor unit.

Note: When sensor is Pt100 resistor based, always use Copper (Cu) cable.

Note: When using thermoelement sensor without temperature transmitter, always use the same thermoelement material in the extension cable as in the measuring thermoelement.

Note: When using thermoelement sensor with temperature transmitter always use Copper (Cu) cable.

Steps to connect the cable to sensor unit:

1) Strip the cable to be connected. It is recommended to strip 50 – 70 millimeters of wires with insulation from the cable jacket. Similarly it is recommended to strip around 10 mm of each conductor to be visible for the connection. Simplified as 50 mm insulated wire with 10 mm of bare conductor at the end.

2) Depending on the cable and connection head in use, attach ground ring terminal to the ground of the cable. In case of EXD connection head, ground wire can be connected without the ground ring terminal.

3) Losen the cable gland parts and bring them over the cable in the order of the picture below. During the transport the cable gland is typically attached to the sensor unit, where it can be detached from. If cable gland is delivered as separate part, there can be internal lock nut with it. Internal lock nut is not used with the connection head and can be discarded. All required parts are shown in the picture below:

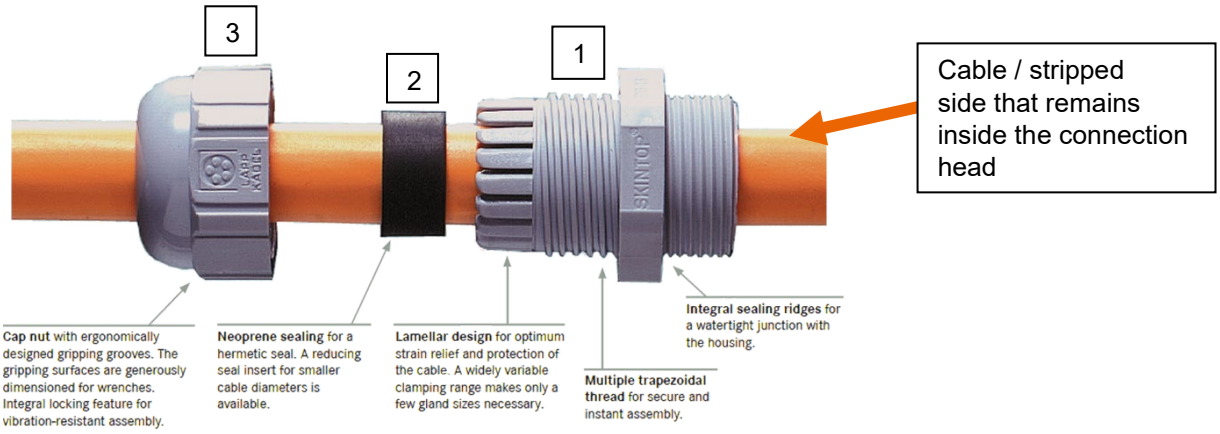

4) Take the parts of the cable gland in the order of the picture into the cable entry thread of the connection head and tighten them in place. Part 2 should be positioned between cable jacket and the forks of the part 1 as a sealant. Tightening is performed by rotating part 3 to part 1. Tightening torques are mentioned in the cable gland datasheet if information is available.

   Note: when taking the stripped cable end into the connection head, leave enough space for the transmitter. Transmitters are typically around Ø45 mm.

5) Test the cable gland functionality by pulling the cable. Cable should not slide off from the cable gland. If this happen, see that the cable gland parts are in correct order and add tension.

6) A) If Pt100 sensor is in use with ceramic block, then always use copper (Cu) cable. Ceramic block has terminals that can be rotated to open and close, for more information see section „RTD; resistance temperature sensor connections“. Connection is typically one cable conductor to one Pt100 wire terminal with Pt100 wire.

   B) If Pt100 sensor is in use with temperature transmitter, see the temperature transmitter datasheet for correct connection. Most datasheets can be found online from the manufacturer. Use copper (Cu) cable with temperature transmitter.

   C) If you are using ceramic terminal block and thermocouple; connection is done by connecting the positive wire of the extension cable under the positive wire of the thermocouple, and similarly negative wire is connected to the negative wire. Ceramic block has terminals that can be rotated to open and close, for more information see section „TC; thermocouple connection“.

Note: Use only same type of thermocouple and extension cable: i.e. K-type sensor will need K-type extension cable, where the conductor core material is the same. Try to set wires in the connection so that they are in direct contact with each other. Any other medium, in between the wires, can cause measurement error to occur.

Note: Never use copper (Cu) cable as extension cable for thermocouple sensor with ceramic block.

D) If you are using thermocouple sensor with temperature transmitter, see the temperature transmitter datasheet for correct connection. Use copper (Cu) cable in the connection.

7) Insulate any cable conductors that will remain un-used within the connection head. This can be done with insulation sleeve or tape.

8) After cable has been connected: close the lid of the connection head.

RTD; resistance temperature sensor connections

Picture below will show IEC 751, international standard, Pt-100 connections and wire color codes:

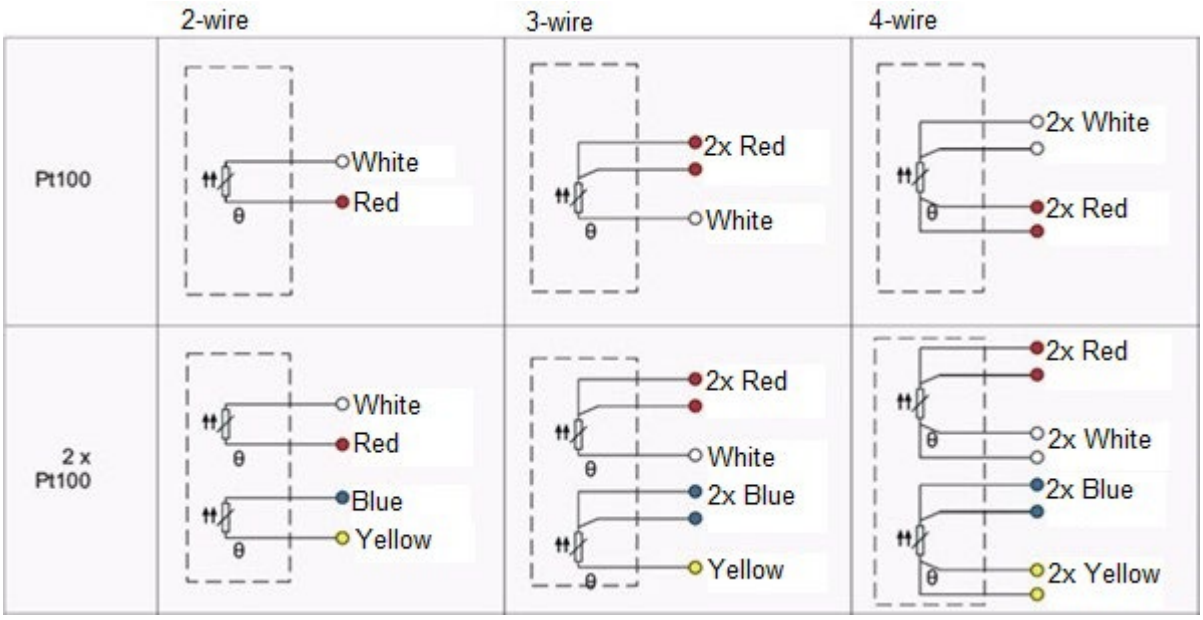

Note: customer specific color codes and wiring is available on request.

RTD; measurement current

Maximum measurement current for Pt100 temperature sensor is depending on the manufacturer of the sensing element.

Generally allowable measurement currents are (Note: this is the maximum current by the manufacturer):

- Pt100 <1 mA
- Pt500 0,5 mA
- Pt1000 0,3 mA

Do not use measurement current above this limit, since it can destroy the sensing element.

Values presented above are normal values. Different values are used in Ex i certified sensor types for safety reasons. This is due to the fact that in Ex i sensor or sensing element the self heating is considered to be relevant. For more information of Ex i measurement current values, please see: Appendix A.

Response time

Response time of temperature sensor is highly depending on the structure around the sensing point and materials in use. Air around the measuring point will act as insulator and slow the response time. Ceramic thermowells, which contain lots of air, will typically slow the response time significantly. Any non-protected measuring element that is directly in contact with the medium to be measured, is fastest in response, but mechanical and chemical durability is lesser. Non-protected measuring elements can not be used in all cases for this reason.

Response time has two different values: T63 [s] and T90 [s]. The T63 time is the time it takes for the sensor to reach 63% of the final temperature and similarly the T90 time is the time it takes for the sensor to reach 90% of the final temperature. Response of temperature sensor is changing exponentially as function of time. This means that measuring the final temperature to a degree will take long time and is not practical in most of the cases. Knowing the T63 or T90 response time of the sensor is sometimes helpful, since this information with a few points of temperature measures, can be sufficient to calculate the current approximate temperature in the target under measurement.

Table below will show response times of different elements:

Sensor	Response time T63 [s]	Response time T90 [s]
Pt100, 1.6 mm element	1,7	3,6
Pt100, 3 mm element	4,2	8,2
Pt100, 6 mm element	13,7	24,7
Pt100, 8 mm element	27,6	47,5
Thermocouple, Type K, 1.5 mm element	1,1	2,4
Thermocouple, Type K, 3 mm element	3,1	7,5
Thermocouple, Type K, 6 mm element	8,2	17,2
Thermowell 6 mm, Pt100, 3 mm element	29,7	62,3
Thermowell 9 mm, Pt100, 6 mm element	39,9	75,3
Thermowell 11 mm, Pt100, 6 mm element	58,8	112,2
Thermowell D1, Pt100, 6 mm element	86,3	153,6
W-Cable sensor, Pt100, 6/60 mm tip	11,2	21,2
Margin of error: ±0,2 [s] These measurement are done by dipping the sensor element to a silicone oil bath, which is precisely temperature controlled. Flow of the silicone oil is constant during the measurements. Initial measurement temperature is +25 [°C] and temperature of silicone oil bath is +100 [°C].		

Chart below will show the response time for some Pt100 elements and K-type thermocouple elements:

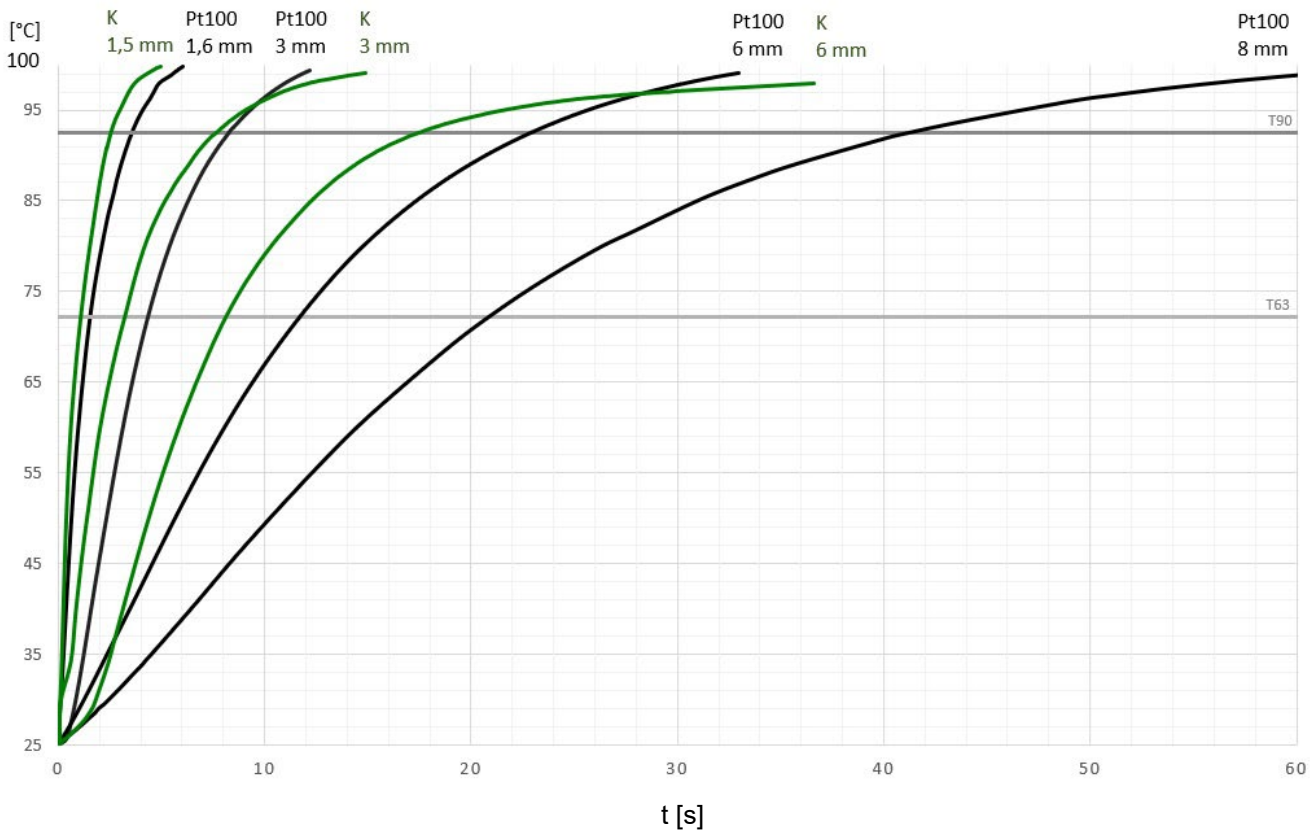

TC; thermocouple structure

Thermocouple element can be exposed, grounded or isolated. Normally thermocouple elements are isolated, and element is also housed in thermowell. This way the measuring thermocouple has multiple layers of protection, and it can be used in various potentially corrosive processes.

Exposed thermocouple means that the thermocouple metallic pair is directly in contact with the medium to be mesured. There is no protective layer. In this case the response time is fastes possible, but the measurement is most likelly very unstable and contains considerable amount of measuring errors. The electrical response generated by heat in the junction point of the two metals of the thermocouple will most likely leak out side the measuring loop.

Grounded thermocouple means that the metal pair of the thermocouple is connected to the metallic housing of the thermowell. There is no isolation between the measuring loop and the external part of the element. In this case the measurement loop can contain galvanically coupled measurement errors travelling from outside.

Isolated structure, also known as ungrounded structure, is most reliable and most shielded from any external internference. In isolated structure the thermocouple is shielded in closed metalic surface and the measuring loop is isolated from the external part of the element. This is the most common type of thermocouple element in temperature measurement.

Thermocouple shielding can be further increased with thermowell and other shielding parts around the measuring element. Thermowell material and thickness are the most significant factors when thinking of chemical and mechanical durability.

Picture below will show the different thermocouple structures:

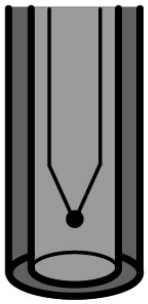

Isolated element in thermowell

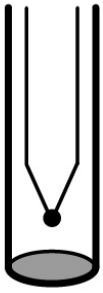

Isolated, ungrounded structure, thermopair is isolated from the external metal parts

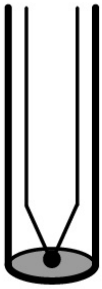

Grounded structure, thermopair is galvanically connected to the external metal parts

Exposed thermocouple, thermopair is in direct contact with the environment

Note: Grounded and ungrounded thermowells can not be used in same measuring loops, always use correct version.

Note: Grounded and exposed thermocouple structure is not allowed in zones with explosive hazards. They should not be used in Ex d or in Ex i certified sensors. For Ex sensor always use isolated, ungrounded, thermocouple element.

TC; thermocouple color codes (IEC 584)

Picture below will show thermocouple color codes according to international standard IEC 584:

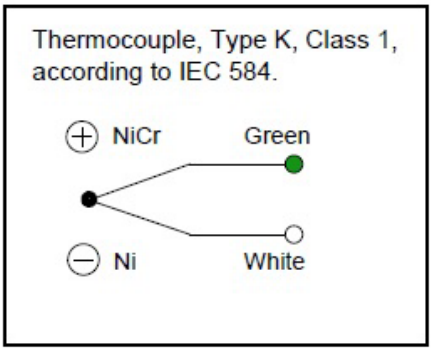

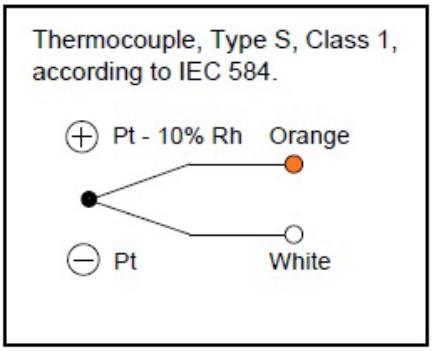

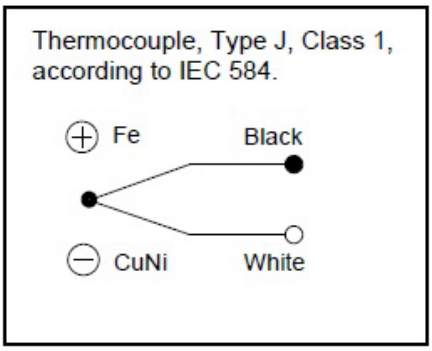

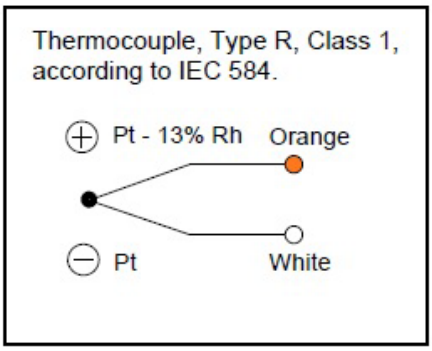

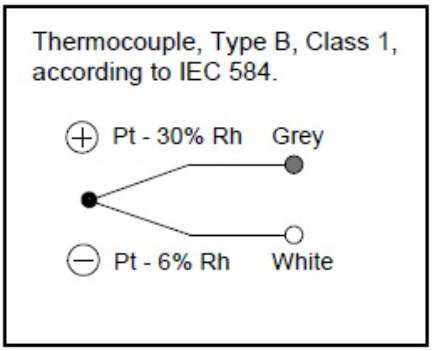

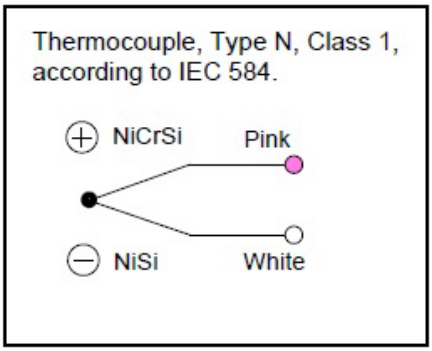

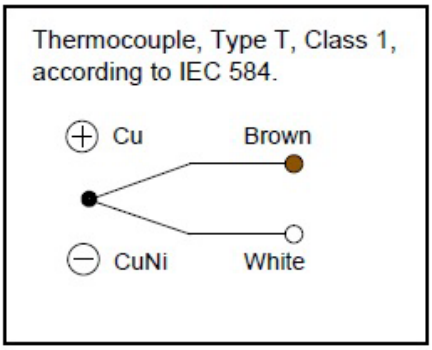

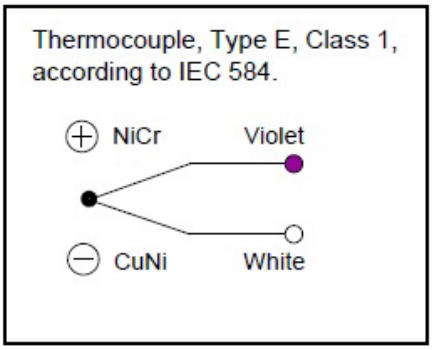

Note: If multiple thermocouples of same type exist on one sensor, thermocouple loops are numbered.

Note: customer specific color codes and wiring is available on request.

TC; thermocouple color codes (DIN 43714)

Picture below will show thermocouple color codes according to German standard DIN 43714:

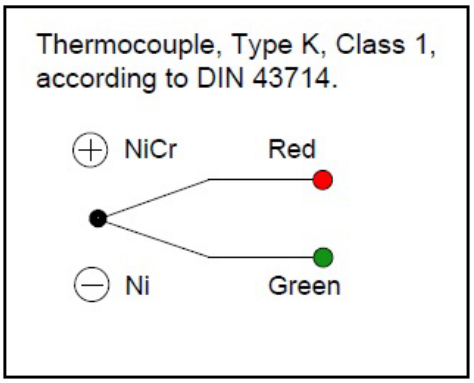

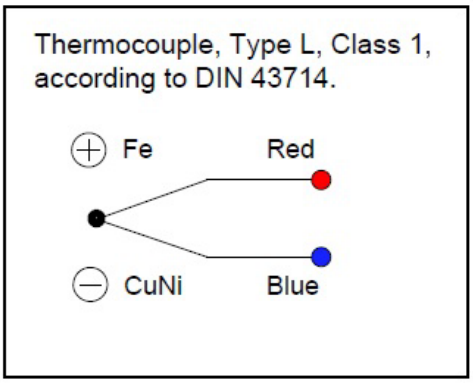

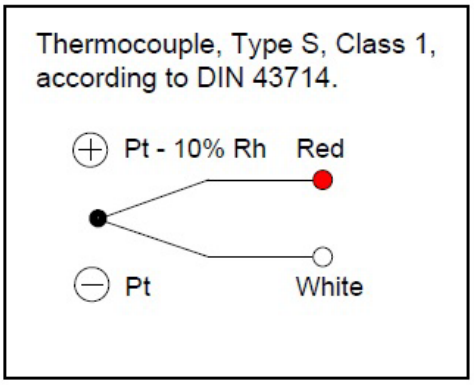

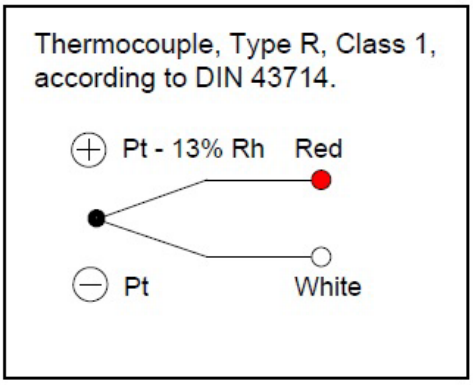

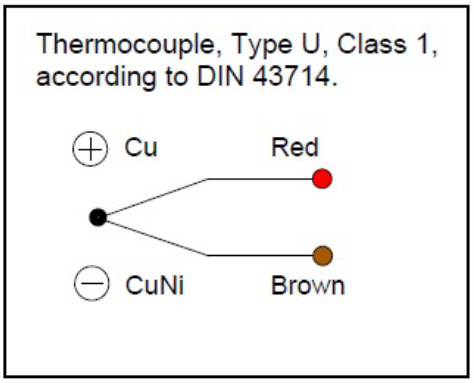

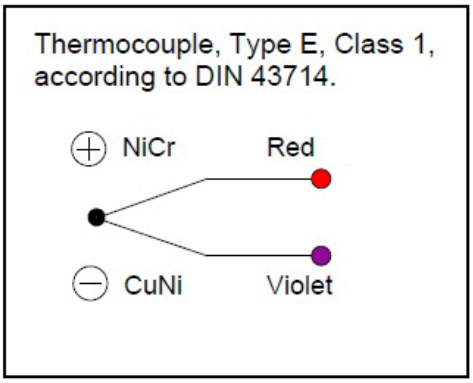

Note: If multiple thermocouples of same type exist on one sensor, thermocouple loops are numbered.

Note: customer specific color codes and wiring is available on request.

TC; thermocouple color codes (ANSI MC96.1)

Picture below will show thermocouple color codes according to U.S. standard ANSI MC96.1:

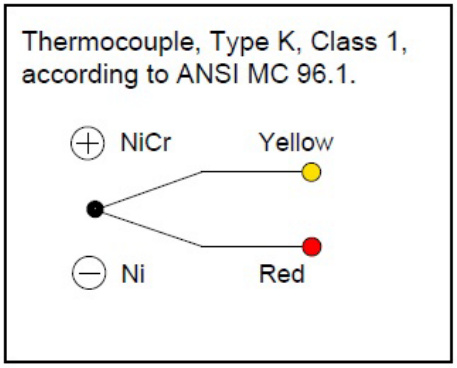

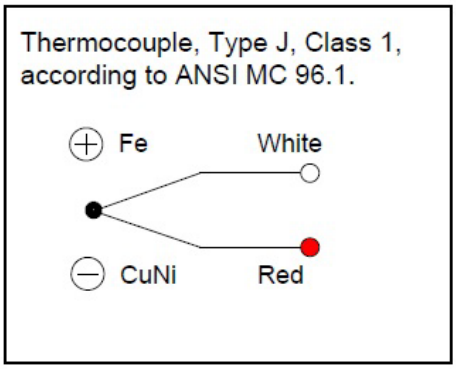

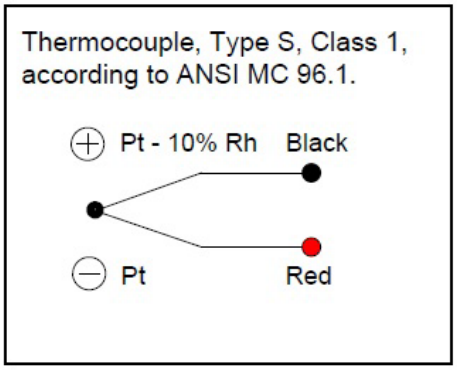

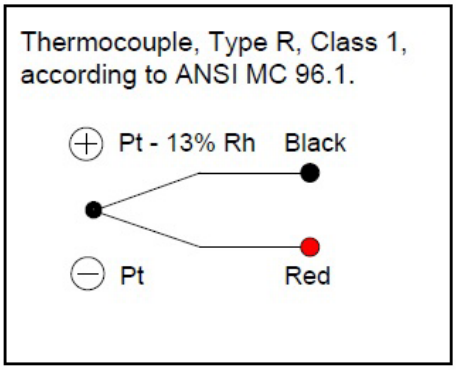

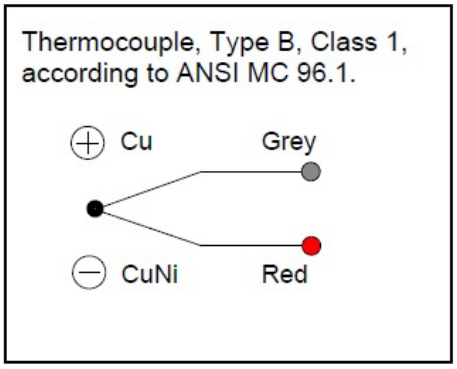

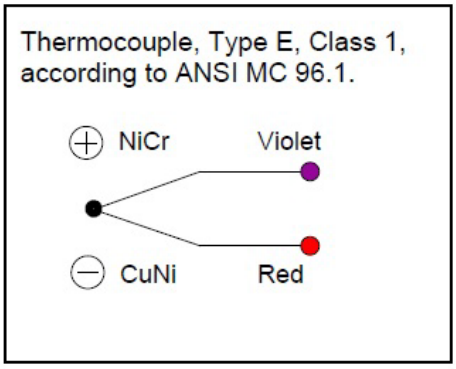

Note: If multiple thermocouples of same type exist on one sensor, thermocouple loops are numbered.

Note: customer specific color codes and wiring is available on request.

TC; Thermocouple cable color codes

Thermo Type	IEC 584	DIN 43714	ANSI MC 96.1
NiCr-Ni / K KCA: Fe-CuNi	+ green/ - white Jacket: green	+ red/ - green Jacket: green	+ yellow/ - red Jacket: yellow
Fe-CuNi / L	—	+ red/ - blue Jacket: blue	—
Fe-CuNi / J	+ black/ - white Jacket: black	—	+ white/ - red Jacket: black
Pt10Rh-Pt / S SCA: E-Cu/A-Cu	+ orange/ - white Jacket: orange	+ red/ - white Jacket: white	+ black/ - red Jacket: green
Pt13Rh-Pt / R RCA: E-Cu/A-Cu	+ orange/ - white Jacket: orange	+ red/ - white Jacket: white	+ black/ - red Jacket: green
Pt30Rh-Pt6Rh / B BC: S-Cu/E-Cu	+ grey/ - white Jacket: grey	—	+ grey/ - red Jacket: grey
NiCrosil-Nisil / N NC: Cu-CuNi	+ pink/ - white Jacket: pink	—	—
Cu-CuNi / U	—	+ red/ - brown Jacket: brown	—
Cu-CuNi / T	+ brown/ - white Jacket: brown	—	—
NiCr-CuNi / E	+ purple/ - white Jacket: purple	+ red/ - purple Jacket: purple	+ purple/ - red Jacket: purple

Type plate

Each sensor has individual type plate attached. Picture below will show example of information found on sensor type plate:

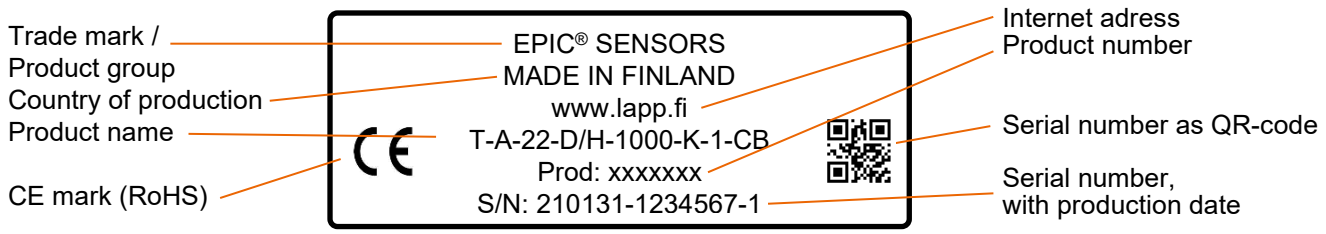

Sensors with EAC EMC approval, that are transported to Eurasian Economic Union area, have their own type of type plate. Below picture will show type plate of EAC EMC approved product, with sensor (*) and transmitter (**).

Serial number

Serial number S/N is always printed to type plate in form of yymmdd-xxxxxxx-x:

- yymmdd — date of production, i.e. “210131” = 31.1.2021
- -xxxxxxx — production order, i.e. “1234567”
- -x — running number of production order, i.e. “1”

Ex d approved sensor

Special conditions for safe use of Ex d approved sensor

Sensors with Ex d approval will meet ATEX and IECEx certificates, but their use should be under certain conditions. In general, sensor with Ex d approval can be recognized from the “EXD” text in product name. Below is text from certificate describing the special conditions of use:

For connection head without window:

-40 °C … + 60 °C temperature class T6/T80 °C

-40 °C … + 75 °C temperature class T5/T95 °C

For connection head with window:

-40 °C … + 60 °C temperature class T6/T80 °C

Note: Drawing of Ex d approved sensor is supplied with the product. This drawing is decleration of compatibility of the product according to the current ATEX and IECEx certificates and it will show the sensor structure. Changes to the sensor structure is not allowed. In some cases the drawing can include instructions on „how to correctly use the sensor“ and these instructions should not be ignored.

Ex d approval ja Ex marking

Certificate	Issuer	Economic zone	Marking
ATEX EESF 18 ATEX 052X	Eurofins Expert Services Oy, EORI: FI2297513-2 Notified body (NANDO) Nr 0537	Europe	Ex II 2G Ex db IIC T6/T5 Gb Ex II 2D Ex tb IIIC T80°C/T95°C Db
IECEx IECEx EESF 20.0034X	Eurofins Expert Services Oy, EORI: FI2297513-2 Notified body (NANDO) Nr 0537	Global	Ex db IIC T6/T5 Gb Ex tb IIIC T80°C/T95 °C Db
EAC № ЕАЭС RU C-FI.AA71.B.00130-19	Lenpromexpertiza OOO, Russia	Eurasian economic zone (Kazakhstan, Belarus, Russia)	1 Ex d IIC T6/T5 Gb X Ex tb IIIC T80°C/T95°C Db X

Type plate of Ex d approved sensor

ATEX and IECEx certified Ex d approved sensors have information on the type plate according to the complying classification. Picture below is an example of a type plate of Ex d approved sensor:

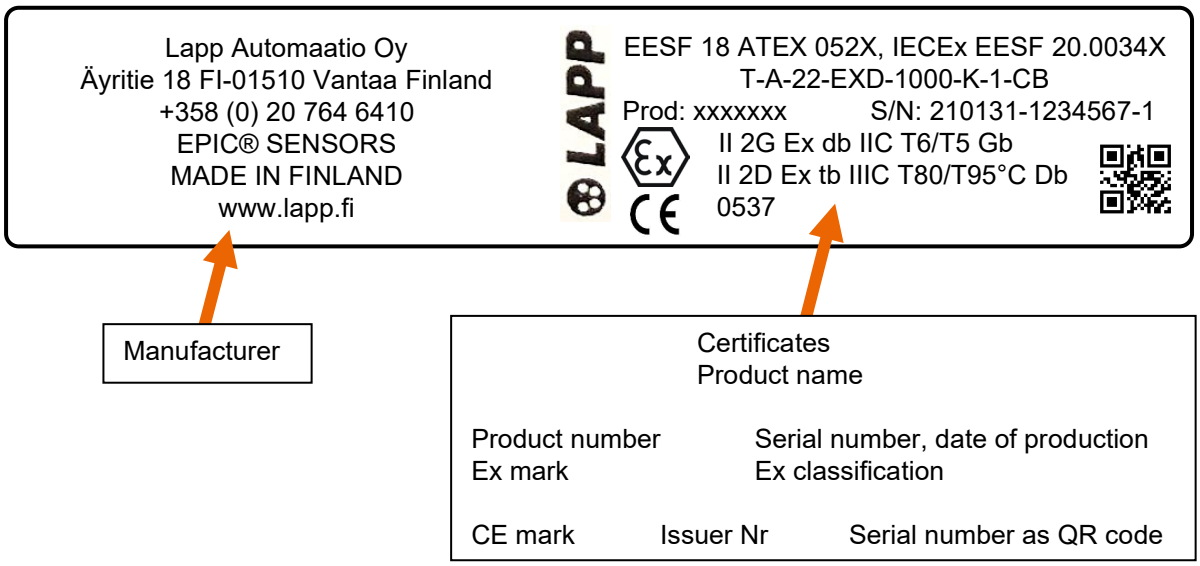

EAC Ex d approved sensors used in Eurasian economic zone have their own type plate version. Picture below will show this type plate:

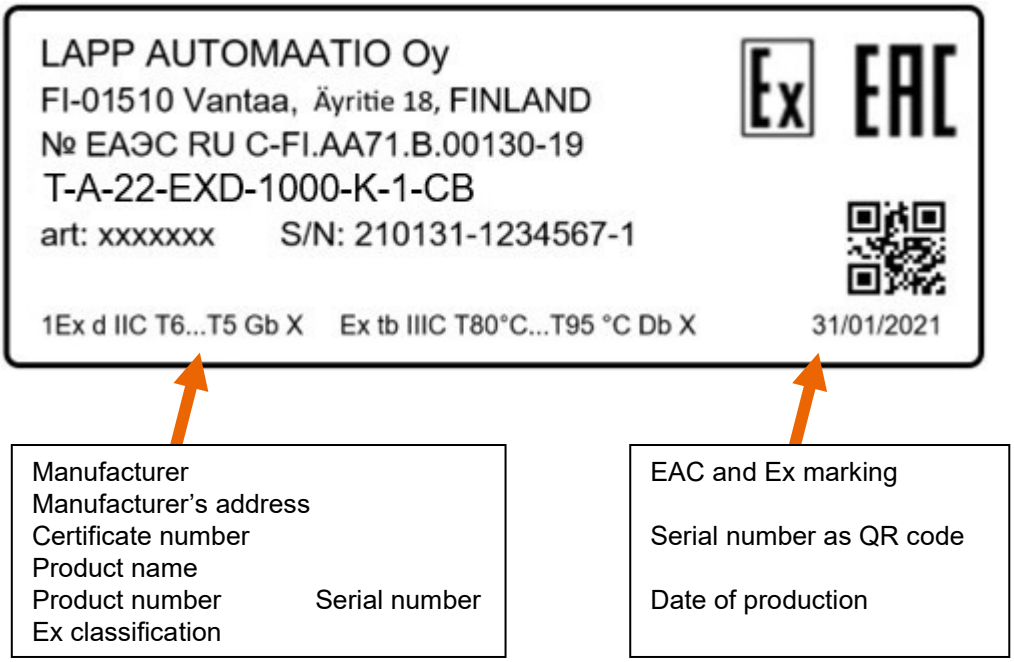

Ex i approved sensor

Special conditions for safe use of Ex i approved sensor

ATEX and IECEx certificates have technical information and special conditions of use for Ex i products. Part of this information is the allowable ambient temperatures. Any information related, special conditions of use and calculus of self heating is presented in appendix: **Appendix A – Technical information and special conditions of use - Ex i certified EPIC® SENSORS temperature sensors.**

Note: Drawing of Ex i approved sensor is supplied with the product. This drawing is decleration of compatibility of the product according to the current ATEX and IECEx certificates and it will show the sensor structure. Changes to the sensor structure is not allowed. In some cases the drawing can include instructions on „how to correctly use the sensor“ and these instructions should not be ignored.

Ex i approval and Ex marking

Certificate	Issuer	Economic zone	Marking
ATEX EESF 21 ATEX 043X	Eurofins Electric & Electronics Finland Oy, Notified body (NANDO) Nr 0537	Europe	Ex II 1G Ex ia IIC T6…T3 Ga Ex II 1/2G Ex ib IIC T6…T3 Ga/Gb Ex II 1D Ex ia IIIC T135 °C Da Ex II 1/2D Ex ib IIIC T135 °C Da/Db
IECEx IECEx EESF 21.0027X	Eurofins Electric & Electronics Finland Oy, Notified body (NANDO) Nr 0537	Global	Ex ia IIC T6…T3 Ga Ex ib IIC T6…T3 Ga/Gb Ex ia IIIC T135 °C Da Ex ib IIIC T135 °C Da/Db

Type plate of Ex i approved sensor

ATEX and IECEx certified Ex i approved sensors have information on the type plate according to the complying classification. Picture below is an example of a type plate of Ex i approved sensor:

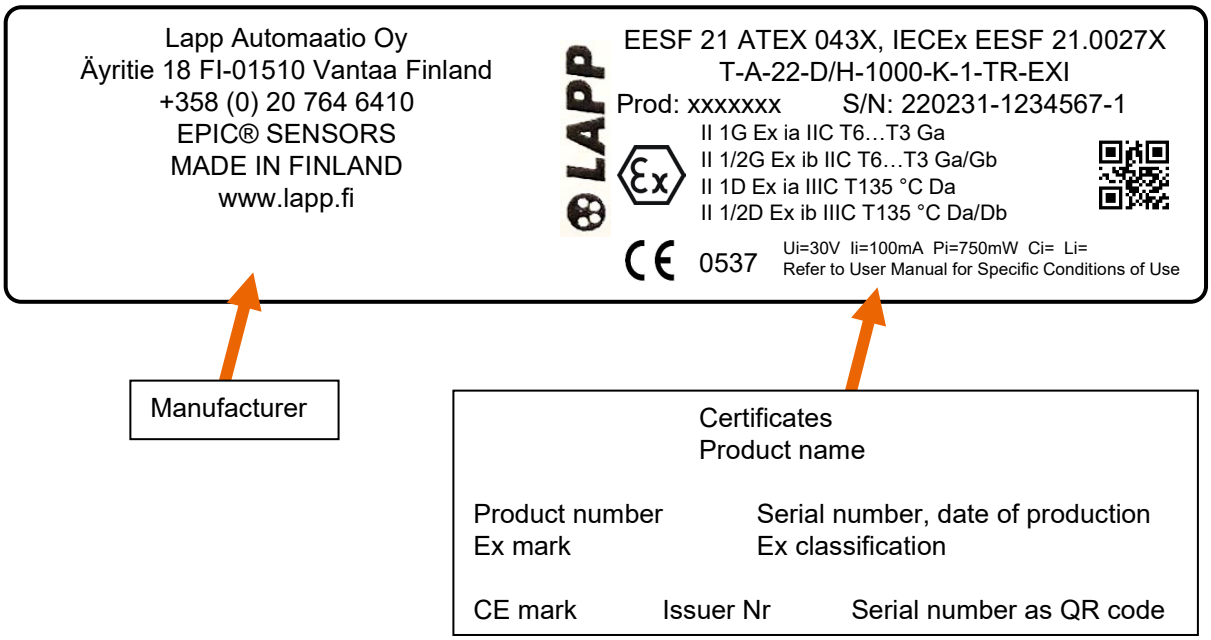

Transportation, packaging and storage

Packaged goods can be transported in weatherproof closed containers on wheels, by rails, or by sea and air routes. Ambient temperature during the transportation should be between -20 … +60 °C and relative air humidity in the package should be less than 80 %.

Package of goods must not be under pressure during the transportation and sudden stops or falls of movement during the loading and unloading must be avoided. Always attach the package during the transportation with sutable load bearing cargo straps.

Inspect the shipment of goods immidiately upon receiving. Any breach and damage in the container and goods must be written to transporting courier's waybill. If seaworthy packaging is needed for transportation, please mention this to our sensor sales team. Products and packaking can be photographed and documented in prior sending the shipment.

Storage conditions: temperature between -20 … +80 °C, relative humidity between 35 … 85% (no condensing allowed).

Maintenance and cleaning

In general temperature sensors are maintenance free. In certain cases sensor can be transported to our premices for maintenance, repair or calibration. Note: Never use third party for repairs, only manufacturer has the „know how" on how to repair. Unqulified repair work can lead to unit with safety issues.

Before sending the sensor, please remove any process residue. Use adequate safety gear during the cleaning. Fill maintenance letter found on our company webpage and put it into the same box of shipment as the sensor unit to be returned. Mention separately if the sensor unit has been in touch with dangerous or hazardous materials, like strong acidic or strong alkaline solutions. Use antistatic packing materials around the sensor unit. Sensors do need to be shipped to production and logistics address. Please find chapter „Manufacturer's addresses".

Recycling and returns

Returns are accepted only if warrantry conditions or other contract term allows.

Always consider the possible process residue in the sensor unit when recycling. Sensor units are processed as electronic and electrical equipment waste, but in case of hazardous process residue, please recycle the sensor unit as hazardous waste material. Use appropriate local waste disposal and recycling facility.

EU declaration of conformity

EU declaration of confirmity can be submitted with the sensor unit. Sensor product specific certificates are available for download from company web page.

Manufacturer's addresses

Main office:

	Lapp Automaatio Oy
Street	Äyritie 18
Postal code, City	01510 Vantaa

Production and logistics:
(address used for returns)

	Lapp Automaatio Oy
Street	Varastokatu 10
Postal code, City	05800 Hyvinkää

Tel. (sales)	020 764 6410
e-mail	sales.fi.lav@lapp.com
www	https://www.lapp.fi/

Document version

Version / YYYYMMDD	Author(s)	Change description
20250801	TeMa	Update
20241007	VeTe	Specification of various technical information and updates of Ex product guides.
20230707	VeTe	Adding of Ex i and Ex d certified sensor unit grounding and other small changes.
20220822	JuPi	Phone number change
20220401	JuPi	Original

Lapp Automaatio Oy is not responsible from any direct, undirect, contemporary or incidental damages or losses, that have been caused by the wrong interpretation of the user of this manual. User must always have competent professional understanding of operation and use the latest version of this manual.

We reserve the right to make changes to this document without further notice. © Lapp Automaatio Oy

Appendix A – Technical information and special conditions of use - Ex i certified EPIC® SENSORS temperature sensors

Ex data for RTD (resistance) and TC (thermocouple) temperature sensors

Sensor Ex data, maximum permitted connection values, without transmitter and/or display.

Electrical values	for group IIC	for group IIIC
Voltage Ui	30 V	30 V
Current Ii	100 mA	100 mA
Power Pi	750 mW	550 mW @ Ta +100 °C
		650 mW @ Ta +70 °C
		750 mW @ Ta +40 °C
Capasitance Ci	Insignificant, *	Insignificant, *
Inductance Li	Insignificant, *	Insignificant, *

Table 1. Sensor Ex data.

* For sensor with long cable, the parameters Ci and Li must be included in the calculation.
Following values per meter can be used according to EN 60079-14:
Ccable = 200 pF/m ja Lcable = 1 µH/m.

Allowed ambient temperatures - Ex i temperature class, without transmitter and/or display.

Marking, gas group IIC	Temperature class	Ambient temperature
II 1G Ex ia IIC T6 Ga II 1/2G Ex ib IIC T6-T3 Ga/Gb	T6	-40…+80 °C
II 1G Ex ia IIC T5 Ga II 1/2G Ex ib IIC T6-T3 Ga/Gb	T5	-40…+95 °C
II 1G Ex ia IIC T4-T3 Ga II 1/2G Ex ib IIC T6-T3 Ga/Gb	T4-T3	-40…+100 °C
Marking, dust group IIIC	**Power Pi**	**Ambient temperature**
II 1D Ex ia IIIC T135 °C Da II 1/2D Ex ib IIIC T135 °C Da/Db	750 mW	-40…+40 °C
II 1D Ex ia IIIC T135 °C Da II 1/2D Ex ib IIIC T135 °C Da/Db	650 mW	-40…+70 °C
II 1D Ex ia IIIC T135 °C Da II 1/2D Ex ib IIIC T135 °C Da/Db	550 mW	-40…+100 °C

Table 2. Ex i temperature classes and allowed ambient temperature ranges

Note!
The temperatures above are for sensors without cable glands.
The compatibility of cable glands must be according to the application specifications.
If the transmitter and/or display will be inside the transmitter housing, the specific Ex requirements of the transmitter and/or display installation must be noted.
The used materials must comply the needs of application, i. e. for the durability and the temperatures above.
For EPL Ga group IIC the aluminium parts in the connection heads are subjected to sparking by impacts or fiction.
For group IIIC the maximum input power Pi shall be observed.
When the sensor is mounted to boundary layer in between different zones, refer to IEC 60079-26 section 6 to ensure boundary layer is not compromised.

Appendix A – Technical information and special conditions of use - Ex i certified EPIC® SENSORS temperature sensors

Considering sensor self-heating

Self-heating of the sensor tip shall be considered in respect with Temperature Classification and associated ambient temperature range, and manufacturer's instructions for calculating tip surface temperature according to thermal resistances stated in the instructions shall be observed.

Allowed ambient temperature range of sensor head or process connection for Groups IIC and IIIC with different temperature classes are listed in Table 2. For Group IIIC the maximum input power Pi shall be observed.

The process temperature shall not adversely affect ambient temperature range assigned for Temperature Classification.

Calculation of self-heating of the sensor tip or the thermowell tip

When the sensor tip is located in environment where the temperature is within T6…T3, it is needed to consider the self-heating of the sensor. Self-heating is of particularly significant when measuring low temperatures.

The self-heating at the sensor tip or thermowell tip depends on the sensor type (RTD/TC), the diameter of sensor and structure of sensor. It is also needed to consider the Ex i values for the transmitter. The table 3. shows the Rth values for different type of sensors structure.

	Thermal resistance Rth [°C / W]					
Sensor type	Resistance thermometer (RTD)			Thermocouple (TC)		
Measuring insert diameter	< 3 mm	3…<6 mm	6…8 mm	< 3 mm	3…<6 mm	6…8 mm
Without thermowell	350	250	100	100	25	10
With thermowell made from tube material (i.e. B-6K, B-9K, B-6, B-9, A-15, A-22, F-11, etc.)	185	140	55	50	13	5
With solid material thermowell (i.e. D-Dx, A-Ø-U)	65	50	20	20	5	1

Table 3. Thermal resistance based on Test report 211126

Note!
If the measuring device for RTD sensor is using measuring current > 1 mA, the maximum surface temperature of the sensor tip should be calculated and taken to account. Please see next page.

If sensor type has multiple sensing elements and those are used simultaneously, note that the maximum power for all sensing elements should not be more than the allowed total power Pi.
Maximum power must be limited to 750 mW. This must be guaranteed by process owner. (Not applicable for Multi-point temperature sensor types T-MP / W-MP or T-MPT / W-MPT with segregated Ex i circuits).

Appendix A – Technical information and special conditions of use - Ex i certified EPIC® SENSORS temperature sensors

Calculation of the maximum temperature:

The self-heating of the sensor tip can be calculated with the following formula:

Tmax= Po × Rth + MT

(Tmax) = Maximum temperature = maximum temperature at the surface of the sensor tip
(Po) = Maximum operating power of the sensor (see the transmitter certificate)
(Rth) = Thermal resistance (K/W, Taulukko 3.)
(MT) = Temperature of the medium under measurement.

Calculation of the maximum permessible temperature at the tip of the sensor:

Example 1 – Calculation for RTD sensor tip with thermowell

Sensor is used in Zone 0
RTD sensor type: W-M-9K ... (RTD sensor with transmitter mounted).
Sensor with thermowell, thermowell diameter Ø 9 mm.
Temperature of medium under measurement (MT) is 120 °C
Components are PR electronics head mounted transmitter 5437D and isolated barrier PR 9106 B.
Maximum temperature (Tmax) can be calculated by adding the temperature of the medium that you are measuring and the self-heating. The self-heating of the sensor tip can be calculated from the Maximum power (Po) which is feeding the sensor and Rth-value of used sensor type. (See the Table 3.)

Supplied power by PR 5437 D is (Po) = 23,3 mW (from the transmitter Ex-certificate)
Temperature class T4 (135 °C) must not be exceeded.
Thermal resistance (Rth) for the sensor is = 55 K/W (from Table 3).
Self-heating is 0.0233 W * 55 K/W = 1,28 K
Maximum temperature (Tmax) is MT + self-heating: 120 °C + 1,28 °C = 121,28 °C
The result in this example shows that, the self-heating at the sensor tip is insignificant.
The safety margin for (T6 to T3) is 5 °C and that must be subtracted from 135 °C; this means that temperature of sensor tip up to 130 °C, with self-heating included, would be acceptable. In this example the temperature of class T4 is not exceeded.

Example 2 – Calculation for RTD sensor tip without the thermowell

Sensor is used in Zone 1
RTD sensor type:W-M-6/303 ... (RTD sensor with cable, no transmitter mounted)
Sensor without thermowell, diameter of measuring tip/element Ø 6 mm.
Temperature of medium under measurement (MT) is 40 °C
Components are PR electronics isolated barrier/transmitter PR 9113 D.
Maximum temperature (Tmax) can be calculated by adding the temperature of the medium that you are measuring and the self-heating. The self-heating of the sensor tip can be calculated from the Maximum power (Po) which is feeding the sensor and Rth-value of used sensor type. (See the Table 3.)

Supplied power by PR 9113D is (Po) = 40,0 mW (from the transmitter Ex-certificate)
Temperature class T3 (200 °C) must not be exceeded.
Thermal resistance (Rth) for the sensor is = 100 K/W (from Table 3).
Self-heating is 0.040 W * 100 K/W = 4,00 K
Maximum temperature (Tmax) is MT + self-heating: 40 °C + 4,00 °C = 44,00 °C
The result in this example shows that, the self-heating at the sensor tip is insignificant.
The safety margin for (T6 to T3) is 5 °C and that must be subtracted from 200 °C; this means that temperature of sensor tip up to 195 °C, with self-heating included, would be acceptable. In this example the temperature of class T3 is not exceeded.

Appendix A – Technical information and special conditions of use - Ex i certified EPIC® SENSORS temperature sensors

Additional information for Group II devices: (according to EN IEC 60079-0: 2019 section: 5.3.2.2 and 26.5.1)

Temperature class for T3 = 200 °C
Temperature class for T4 = 135 °C
Safety margin for T3 to T6 = 5 K
Safety margin for T1 to T2 = 10 K.

Note!

This Appendix A is an instructional document on specifications.
For original regulatory data on specific conditions, always refer to ATEX and IECEx certificates:

EESF 21 ATEX 043X
IECEx EESF 21.0027X